# D-1125-B-1 SPECIFICATIONS

## MOTOR CHARACTERISTICS @ 25° C

| Specification | Units | Value |
|---|---|---|
| Peak Torque, $T_P$ | oz-in | 6.6 |
| Motor Constant, $K_M$ | oz-in / √W | 0.899 |
| Number of Poles | | 4 |
| Weight | oz (nom) | 1.8 |
| Motor Inertia, $J_M$ | oz-in-s$^2$ | 1.50E-04 |
| Friction Torque, $T_F$ | oz-in | 0.20 |
| Electrical Time Constant, $T_E$ | ms | 0.216 |
| Mechanical Time Constant, $T_M$ | ms | 26.24 |
| Temperature Rise, TPR' | °C / W | 33 |
| Ripple Torque, $T_R$ | max. avg. to peak (%) | 7 |

## MOTOR WINDING CONSTANTS

| Specification | Units | Value |
|---|---|---|
| Torque Sensitivity, $K_T$ | oz-in / amp | 4.10 |
| Back EMF, $K_E$ | V per rad/s | 0.029 |
| Terminal Resistance, $R_M$ | ohms (nom) | 20.8 |
| Terminal Inductance, $L_M$ | mH (nom) | 4.5 |
| Voltage, Stalled at Peak Torque, $V_P$ | volts | 33.3 |
| Amps at Peak Torque, $I_P$ | amps | 1.60 |
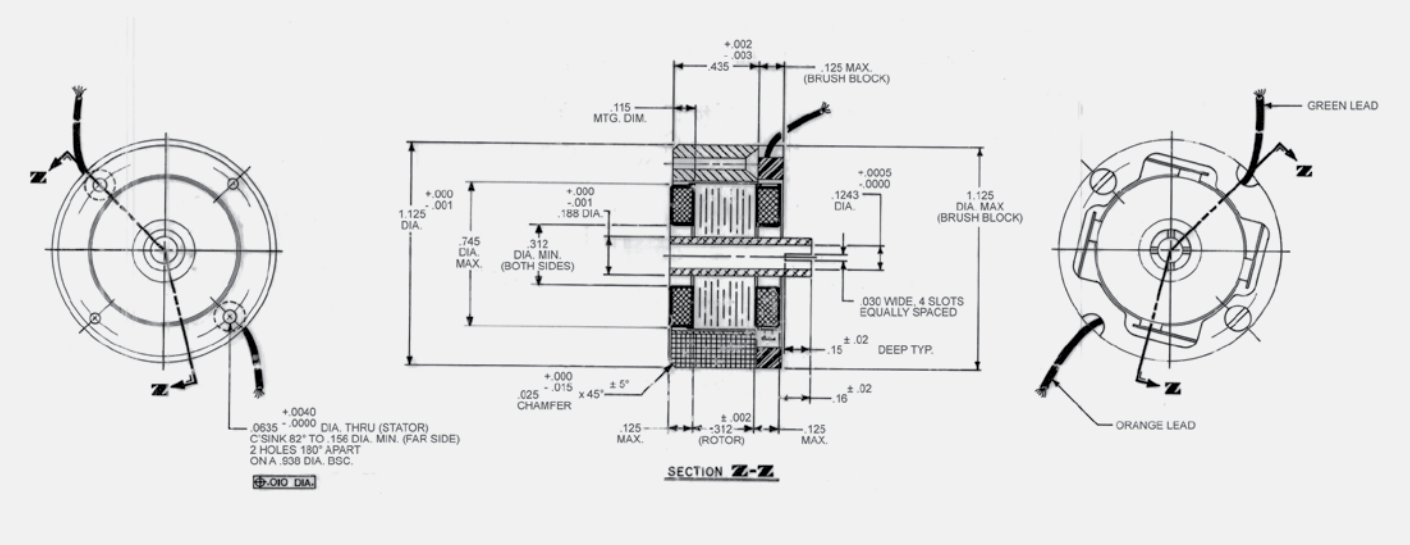
## MECHANICAL DIMENSIONS (INCHES)