D-3180-C-2A SPECIFICATIONS

MOTOR CHARACTERISTICS @ 25° C

Specification	Units	Value
Peak Torque, T_P	oz-in	480
Motor Constant, K_M	oz-in / √W	29.8
Number of Poles		10
Weight	oz (nom)	36
Motor Inertia, J_M	oz-in-s^2	3.50E-02
Friction Torque, T_F	oz-in	10
Electrical Time Constant, T_E	ms	0.923
Mechanical Time Constant, T_M	ms	5.59
Temperature Rise, TPR'	°C / W	5
Ripple Torque, T_R	max. avg. to peak (%)	7

MOTOR WINDING CONSTANTS

Specification	Units	Value
Torque Sensitivity, K_T	oz-in / amp	48
Back EMF, K_E	V per rad/s	0.339
Terminal Resistance, R_M	ohms (nom)	2.60
Terminal Inductance, L_M	mH (nom)	2.4
Voltage, Stalled at Peak Torque, V_P	volts	26
Amps at Peak Torque, I_P	amps	10
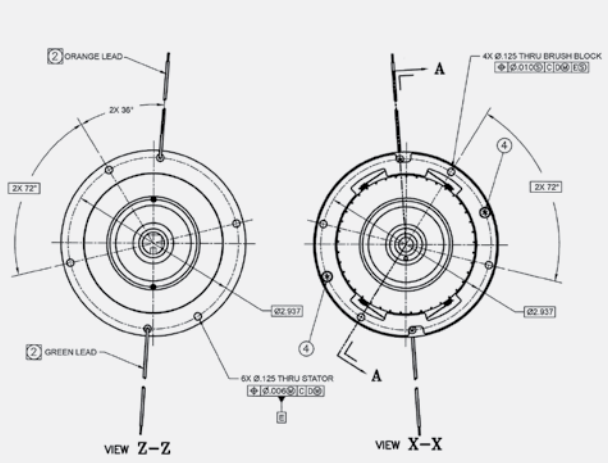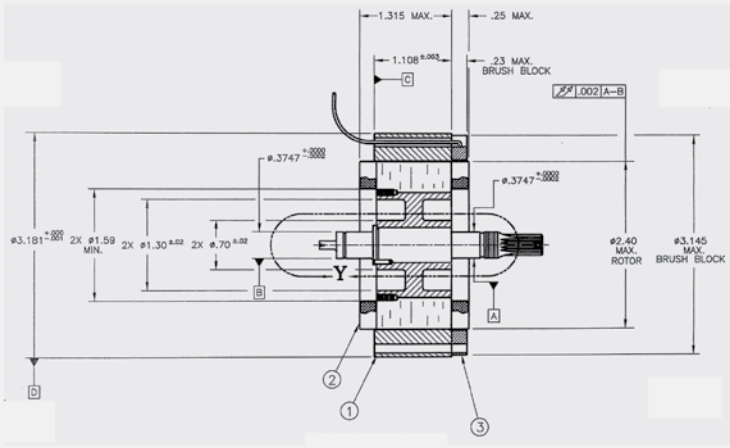
MECHANICAL DIMENSIONS (INCHES)