D-3375-A-2 SPECIFICATIONS

MOTOR CHARACTERISTICS @ 25° C

Specification	Units	Value
Peak Torque, T_P	oz-in	58
Motor Constant, K_M	oz-in / √W	10
Number of Poles		12
Weight	oz (nom)	8.5
Motor Inertia, J_M	oz-in-s^2	1.63E-02
Friction Torque, T_F	oz-in	2
Electrical Time Constant, T_E	ms	0.243
Mechanical Time Constant, T_M	ms	22.46
Temperature Rise, TPR'	°C / W	6.2
Ripple Torque, T_R	max. avg. to peak (%)	7

MOTOR WINDING CONSTANTS

Specification	Units	Value
Torque Sensitivity, K_T	oz-in / amp	46
Back EMF, K_E	V per rad/s	0.325
Terminal Resistance, R_M	ohms (nom)	20.6
Terminal Inductance, L_M	mH (nom)	5
Voltage, Stalled at Peak Torque, V_P	volts	26
Amps at Peak Torque, I_P	amps	1.26
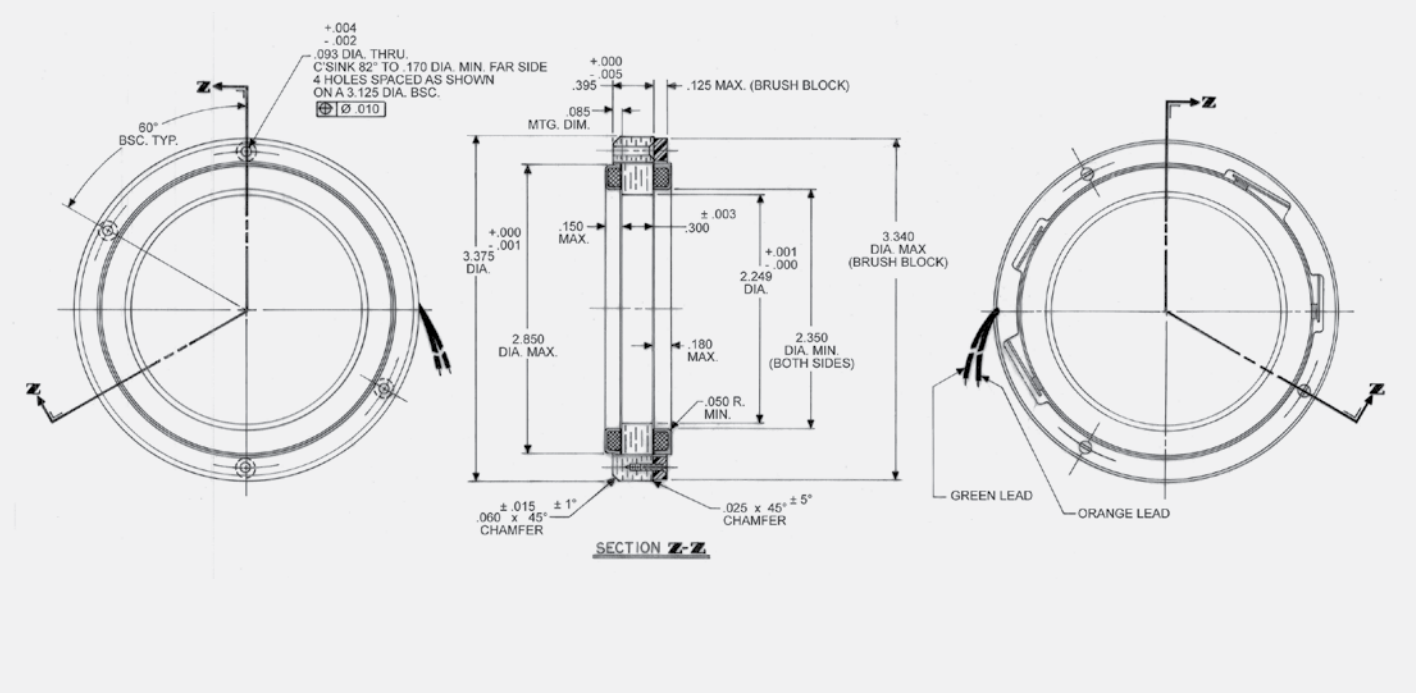
MECHANICAL DIMENSIONS (INCHES)