D-7200-C-1ES SPECIFICATIONS

MOTOR CHARACTERISTICS @ 25° C

Specification	Units	Value
Peak Torque, T_P	oz-in	43.3
Motor Constant, K_M	oz-in / √W	1.70
Number of Poles		20
Weight	oz (nom)	22
Motor Inertia, J_M	oz-in-s^2	2.27x10^{-2}
Friction Torque, T_F	oz-in	0.60
Electrical Time Constant, T_E	ms	2.2
Mechanical Time Constant, T_M	ms	5.81
Temperature Rise, TPR'	°C / W	0.78
Ripple Torque, T_R	max. avg. to peak (%)	4

MOTOR WINDING CONSTANTS

Specification	Units	Value
Torque Sensitivity, K_T	oz-in / amp	1.90
Back EMF, K_E	V per rad/s	2.57
Terminal Resistance, R_M	ohms (nom)	1.25
Terminal Inductance, L_M	mH (nom)	2.8
Voltage, Stalled at Peak Torque, V_P	volts	28.5
Amps at Peak Torque, I_P	amps	22.8
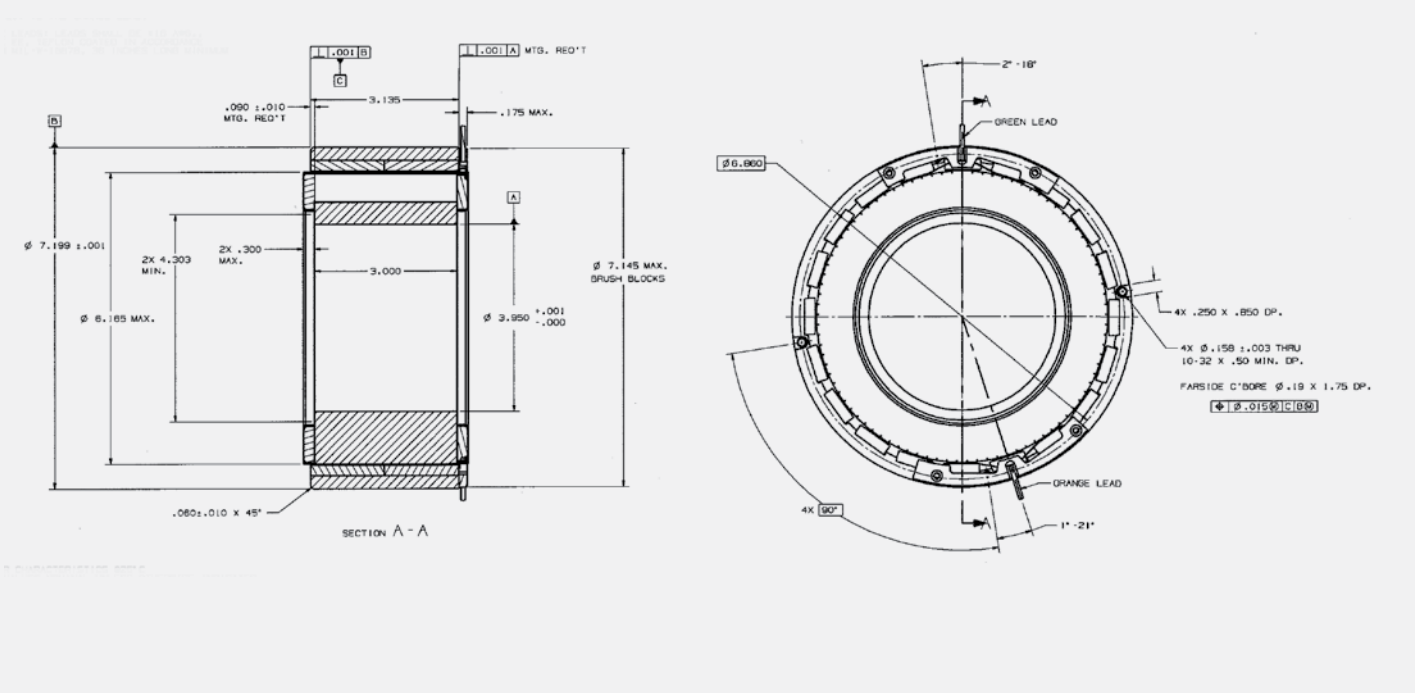
MECHANICAL DIMENSIONS (INCHES)