TD-1750-C-1 SPECIFICATIONS

MOTOR CHARACTERISTICS @ 25° C

Specification	Units	Value
Peak Torque, T_P	oz-in	12
Motor Constant, K_M	oz-in / √W	1.48
Excursion Angle	degrees	± 31
Number of Poles		4
Weight	oz (nom)	2.5
Motor Inertia, J_M	oz-in-s^2	6.60E-04
Friction Torque, T_F	oz-in	0.05
Electrical Time Constant, T_E	ms	TBD
Mechanical Time Constant, T_M	ms	36.54

MOTOR WINDING CONSTANTS

Specification	Units	Value
Torque Sensitivity, K_T	oz-in/amp	4
Back EMF, K_E	V per rad/s	0.028
Terminal Resistance, R_M	ohms (nom)	6.2
Terminal Inductance, L_M	mH (nom)	TBD
Voltage, Stalled at Peak Torque, V_P	volts	19
Amps at Peak Torque, I_P	amps	3
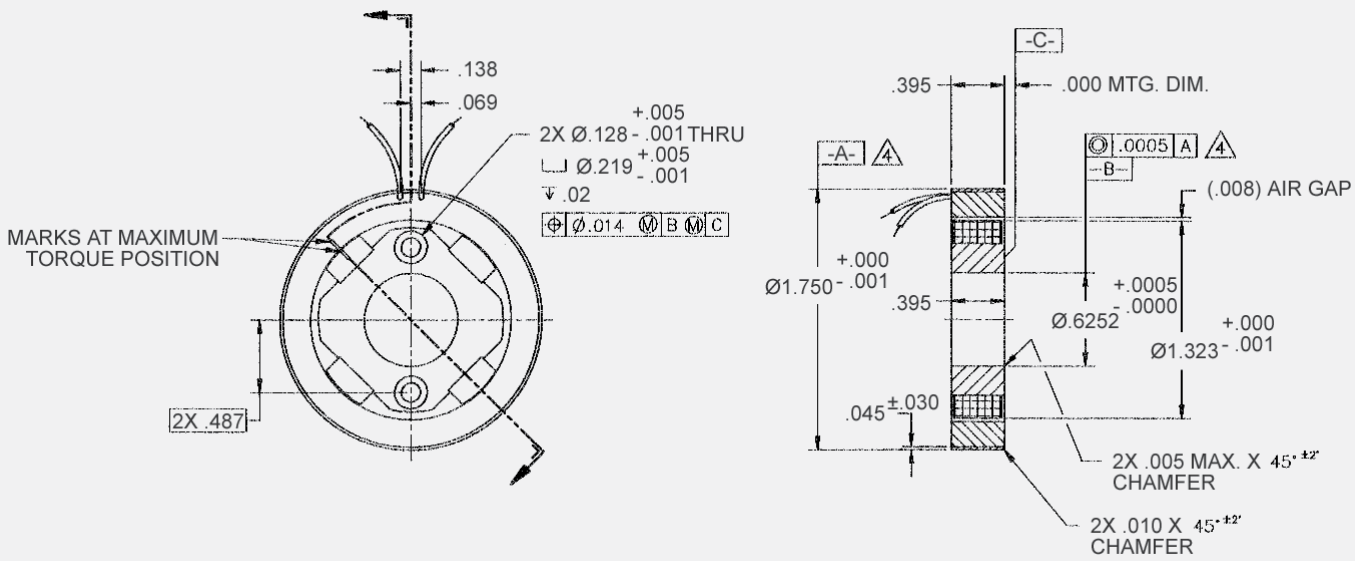
MECHANICAL DIMENSIONS (INCHES)