DIFFERENTIAL PROPORTIONAL FLOW CONTROL VALVE

SIZES 16 AND 20

PHASE-OUT PRODUCT
Do not use in new applications!

REv. A, 08/2018

WHAT MOVES YOUR WORLD

MOOG

PHASE-OUT PRODUCT
Do not use in new applications!

Designation	Symbol	Page
General Description and Operating Principle		4
Specifications		5
Performance Data DPCMEE16 - CK; EK and DK Cones		6
Response Characteristics Frequency & Step Response- DPCMEE16		7
Performance Data DPCMEE20 - CK; EK and DK Cones		8
Response Characteristics Frequency & Step Response- DPCMEE20		9
Standard Models	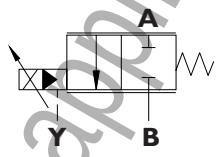	10
Dimensions Valve & Cavity Dimensions - DPCMEE16		11
Dimensions Valve & Cavity Dimensions - DPCMEE20		12
Ordering Information		13
Spare Parts		14

PHASE-OUT PRODUCT
Do not use in new applications!

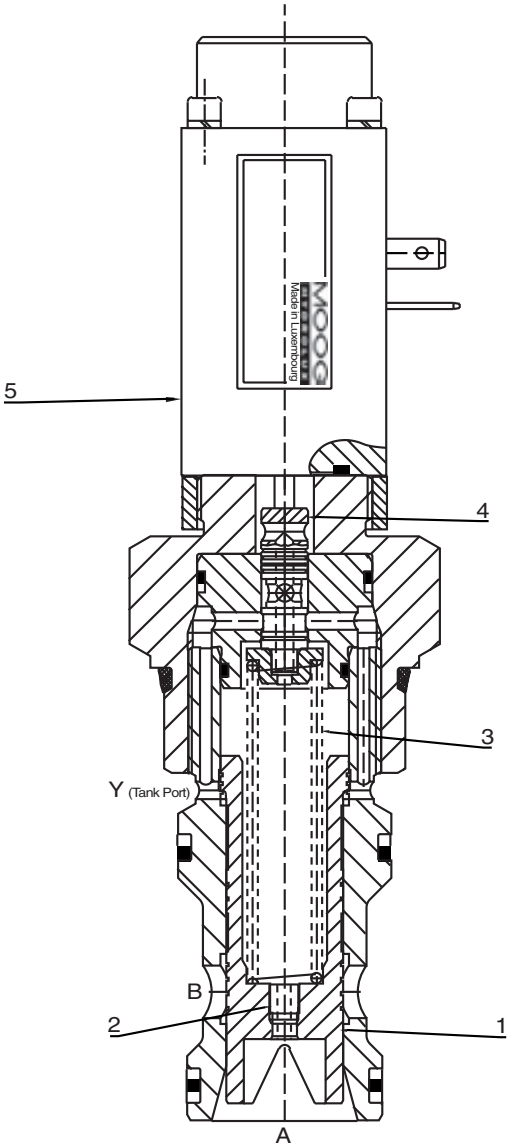

DESCRIPTION:

Moog Luxembourg's DPCMEE series differential proportional flow control valves are used to regulate flow from 'A' port to 'B' port. This valve uses a self-regulating hydraulic design for control of flow rate by a current-controlled PWM signal. This screw-in cartridge type valve is designed to fit in SAE style cavity with UNF thread for use in manifolds. It can also be used in conjunction with 2- or 3-way pressure compensators as a 2- or 3- way pressure compensated flow control valve.

OPERATING PRINCIPLE:

This valve is in a normally closed condition. In the closed condition the pressure of the fluid at the 'A' port is sensed through the orifice (2) and acts on the main spool (1). Since the pilot spool (4) is a pressure balanced design, the main spool is held closed due to the hydraulic pressure and the spring (3) force. When a current signal is applied to the valve, the proportional solenoid (5) extends. The force of the solenoid (5), which is directly proportional to the applied signal, pushes the pilot spool (4) downwards. At this time the pilot spool (4) connects the pilot side flow to the tank port internally, thus creating a pressure drop across the orifice (2). This will allow the main spool to move upwards, allowing flow from 'A' port to 'B' port. As the main spool (1) opens, the forces become unbalanced between the spring (3) and solenoid (5) acting on the pilot spool (4). At which time this force balance is reestablished, the main spool (1) stops moving. This allows the valve to be used for proportionally controlling the flow by steplessly varying the input current signal.

PHASE-OUT PRODUCT
Do not use in new applications!

General Data	Value	Unit	Specifications
Designation			Differential-proportional flow control valve
Type Designation			Refer to Ordering Information page 13
Mode of Construction			Cartridge-Screw-in-Valve
Mounting Style			Manifold Mounting
Branch Circuit Connection			Drillings in the Manifold
Mounting Dimensions		mm	See page 11 and 12
Mounting Position			Any
Flow Direction			A → B
Ambient Temperature Range	min.	°C	-25
	max.	°C	+60
Working Pressure			
Input	min.	bar	5
	max.	bar	350
Outlet	min.	bar	0
	max.	bar	350
Fluid Temperature Range	min.	°C	-20
	max.	°C	+80
Viscosity Range	min.	cSt	2,8
	max.	cSt	380
Operational Viscosity	Vn	cSt	35
Connection Bore = Size (mm)			See page 11 and 12
Weight of Typical Assembly		kg	See page 10
Nominal Flow	Qn	l/min	See Page 6 and 8
Filtration	Maximum permissible degree of contamination of fluid to NAS 1638 Class 9. We there fore recommend a filter with a minimum retention rate of $ß_{10} \geqslant 75$.		

PHASE-OUT PRODUCT
Do not use in new applications!

Performance Curve DPCMEE16S8 – Cone CK

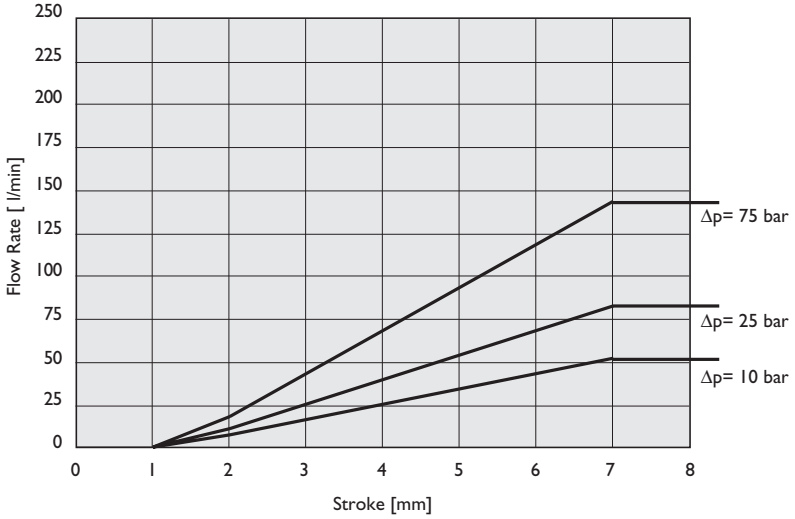

Formula:

To calculate flow at different pressure drops, use the following formula:

$$Qx = Q\Delta p_{10} \sqrt{\frac{\Delta px}{10}}$$

Where:

Qx = Flow at pressure drop Δpx-lpm

$Q\Delta p_{10}$ = Flow at 10 bar pressure drop (from the curves)

Δpx = Pressure drop in bar at which flow is calculated

Performance Curves DPCMEE16S8 – Cone EK

PHASE-OUT PRODUCT
Do not use in new applications!

Performance Curves DPCMEE16S8 – Cone DK

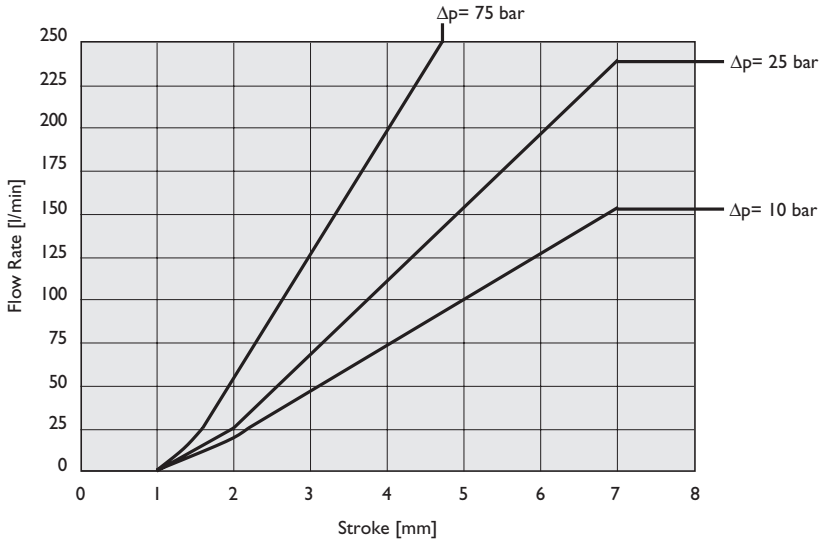

Frequency Response – DPCMEE16S8

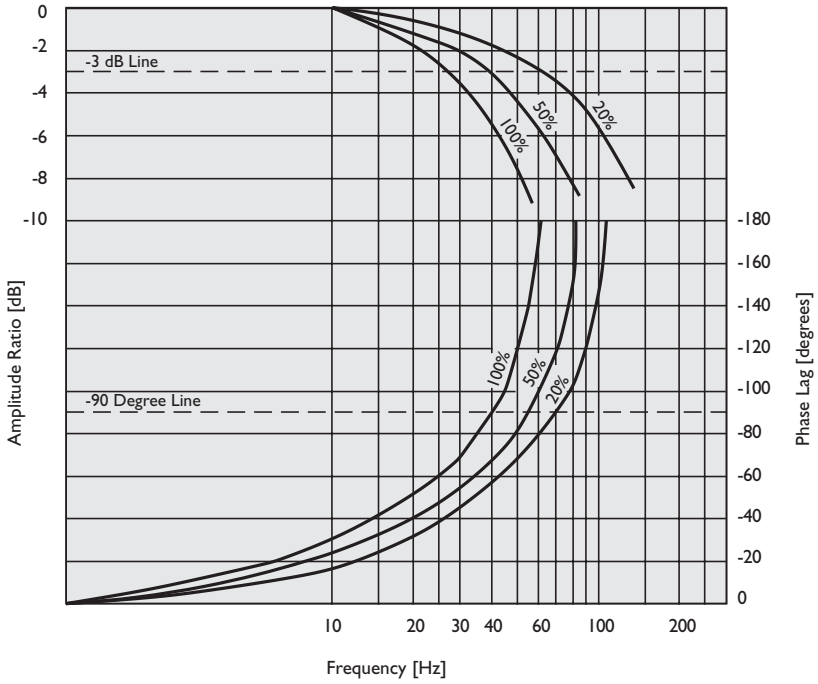

Current vs Stroke Characteristic Curve DPCMEE16S8

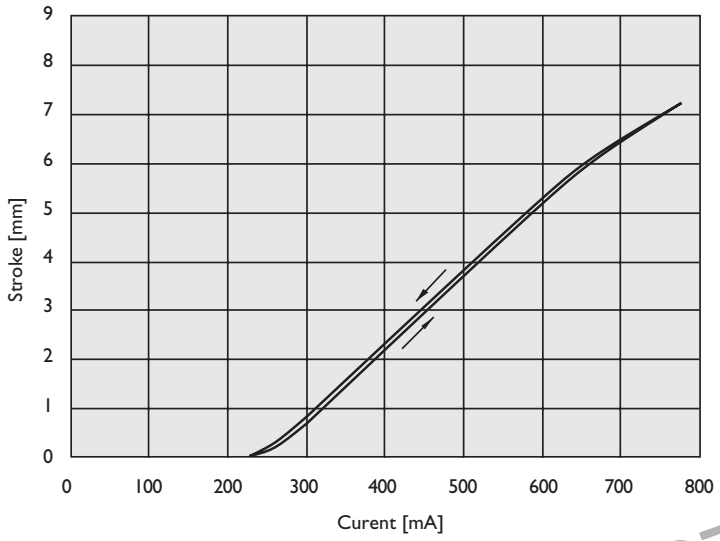

PHASE-OUT PRODUCT
Do not use in new applications!

Performance Curves – DPCMEE20S8 – Cone CK

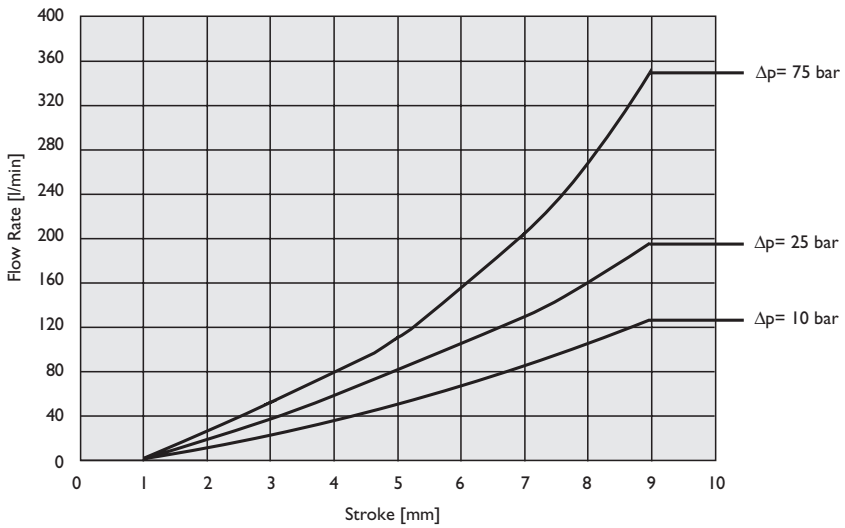

Formula:

To calculate flow at different pressure drops, use the following formula:

$$Qx = Q\Delta p_{10}\sqrt{\frac{\Delta px}{10}}$$

Where:

Qx = Flow at pressure drop Δpx-lpm

$Q\Delta p_{10}$ = Flow at 10 bar pressure drop (from the curves)

Δpx = Pressure drop in bar at which flow is calculated

Performance Curves – DPCMEE20S8 – Cone EK

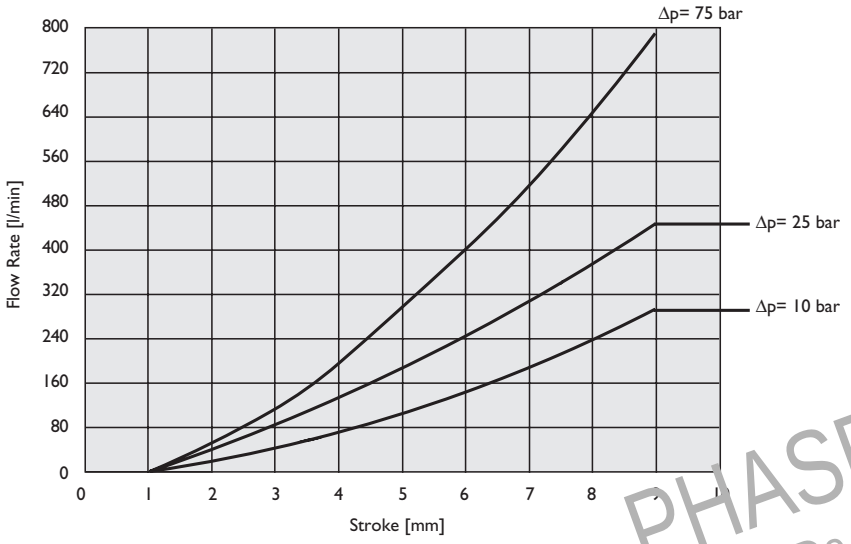

PHASE-OUT PRODUCT
Do not use in new applications!

Performance Curves – DPCMEE20S8 – Cone DK

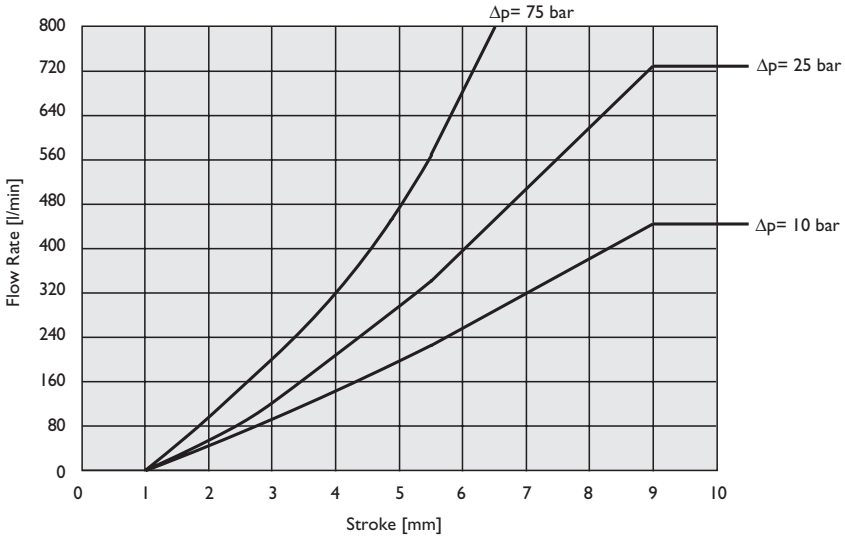

Frequency Response – DPCMEE20S8

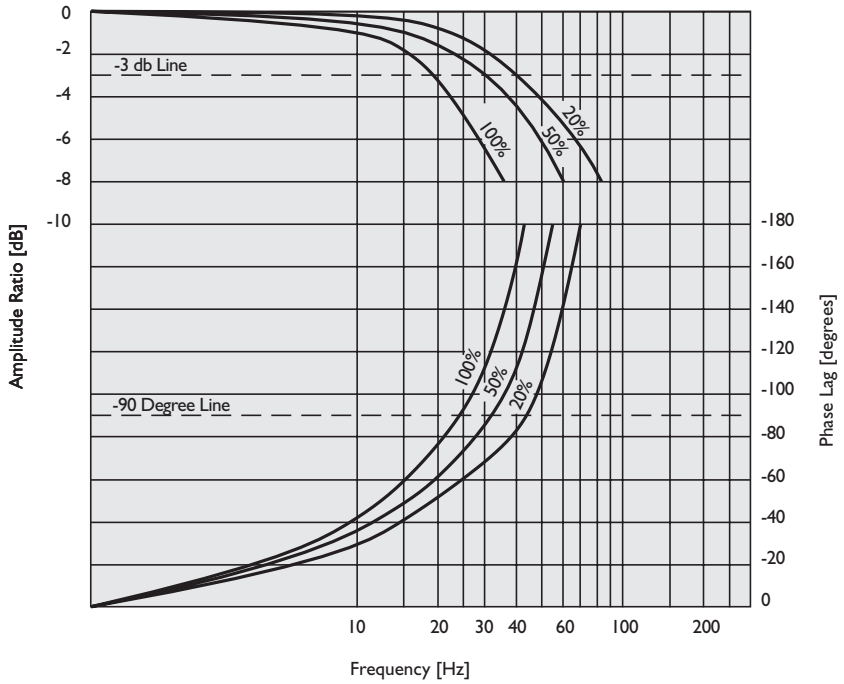

Current vs Stroke Characteristic Curve DPCMEE20S8

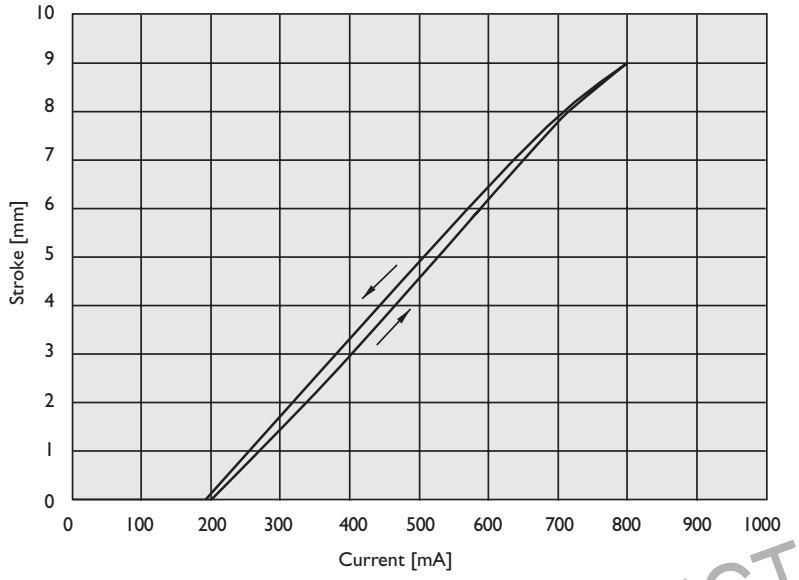

PHASE-OUT PRODUCT
Do not use in new applications!

Standard Models

Symbol	Function	Nominal Size*	Weight [kg]	Part Designation	Part Number
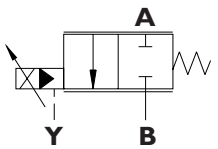 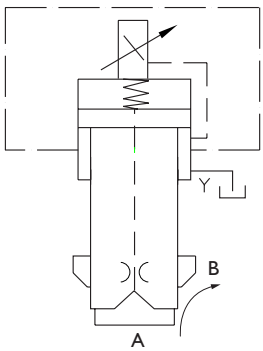	**Proportional Throttle**	**16**	**1.2**	DPCMEE16S8CK0ZS3B	XDB10108-000-01
				DPCMEE16S8EK0ZS3B	XDB10107-000-01
				DPCMEE16S8DK0ZS3B	XDB10109-000-01
		20	**1.5**	DPCMEE20S8CK0ZS3B	XDB10110-000-01
				DPCMEE20S8EK0ZS3B	XDB10111-000-01
				DPCMEE20S8DK0ZS3B	XDB10112-000-01

*Nominal size refers to the Standard Industrial "Sh[illegible] Series" screw-in cavities. Refer to pages 11 & 12 for cavity details.

PHASE-OUT PRODUCT
Do not use in new applications!

Valve Dimensions - DPCMEE16S8

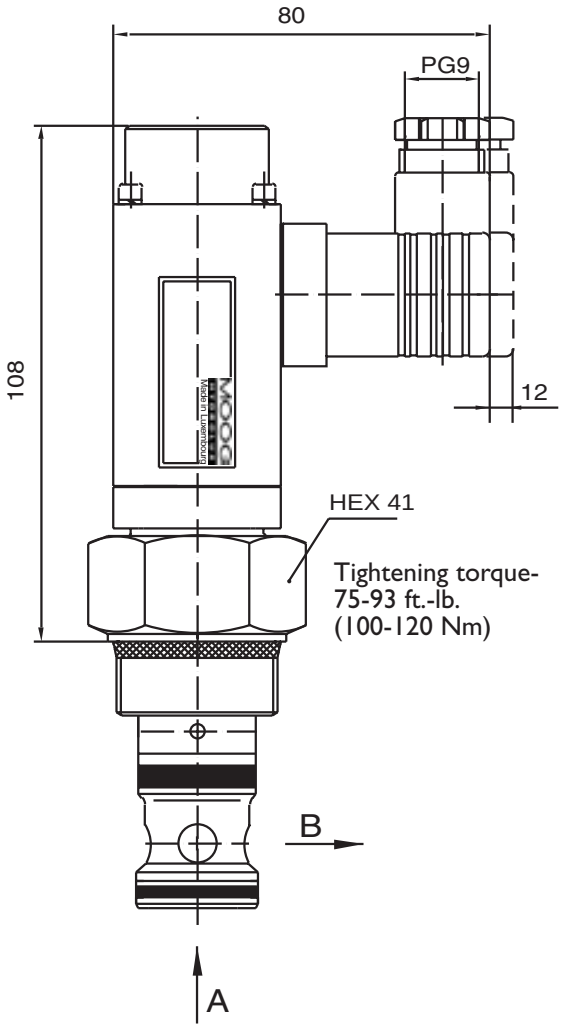

Cavity Dimensions - DPCMEE16S8

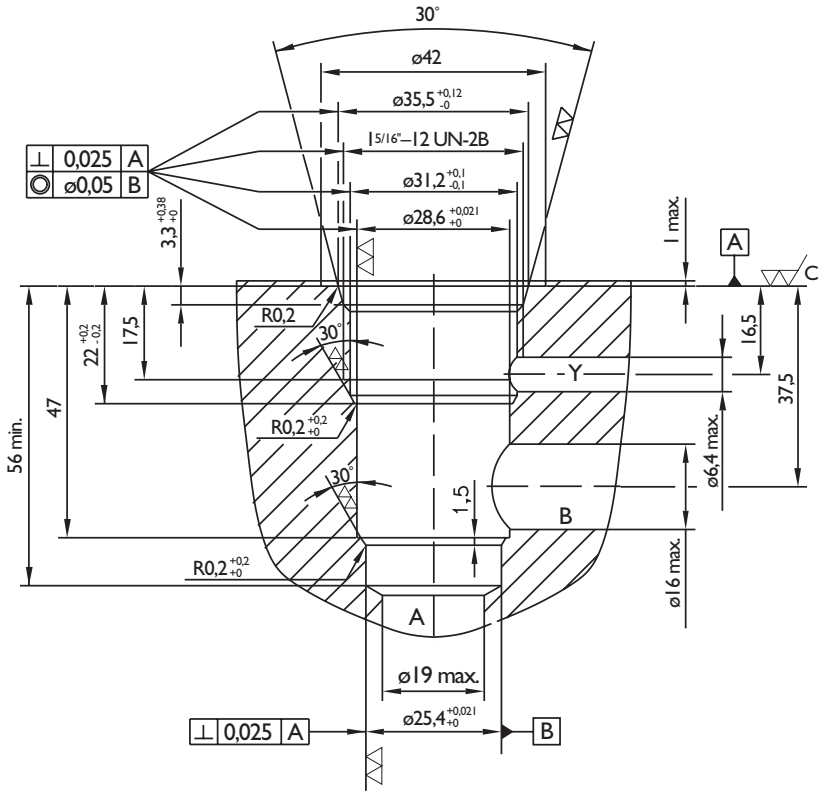

PHASE-OUT PRODUCT
Do not use in new applications!

Valve Dimensions - DPCMEE20S8

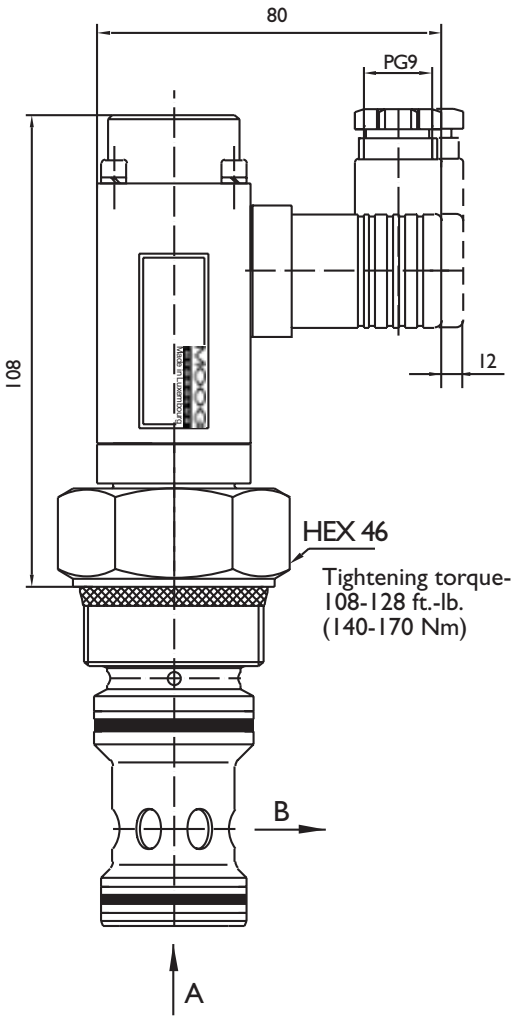

Cavity Dimensions - DPCMEE20S8

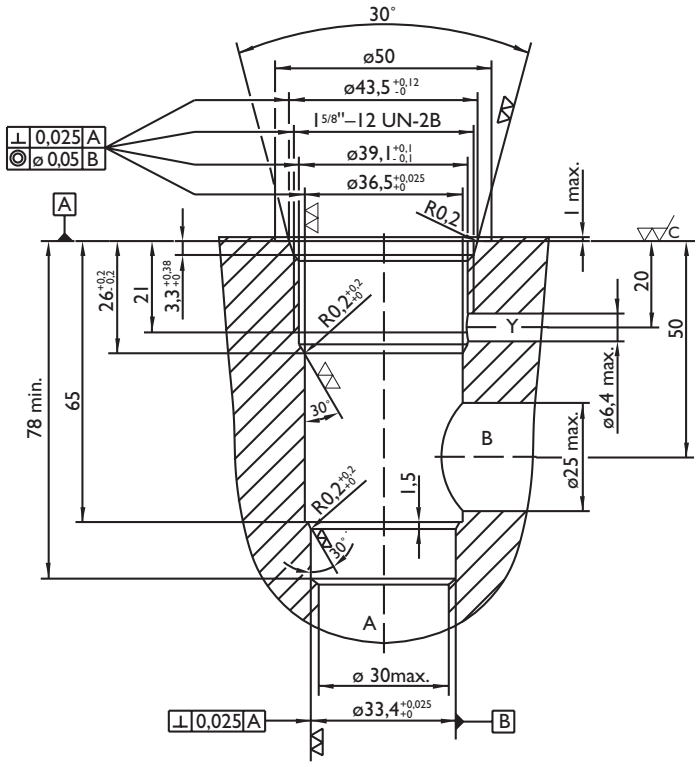

PHASE-OUT PRODUCT
Do not use in new applications!

[ ] DP CME E [ ] S 8 [ ] [ ] 2 S 3 [ ] [ ] / [ ]

Type of Seals	
–	Viton seals std.
M	MIXED VITON and PU seal
N	BUNA – N SEALS
S	Special seals on request

Valve Type	
DP	Differential Proportional Flow control

Function	
CME	Electrical infinite Remote control

Mounting	
E	Manifold mounting

Size	
Nominal size	16
	20

Connection	
S	SAE thread

Series	
8	Screw-in valve

Opening pressure	
Z	Not applicable

Flow Rate of the Cone – l/min	
	Nominal flow
xxx	Max flow for the cone in l/min ex: 170 = Max flow 170 l/min

Type of Cone & Nominal Flow @ 6 bar pressure drop – l/min			
Nominal Size – 16		Nominal Size – 20	
CK	40	CK	100
EK	80	EK	200
DK	120	DK	300
GK	Special form (consult factory)	GK	Special form (consult factory)

Special modification

Electrical connection (Optional)	
1	Cube plug recommended by DIN 43650
2	Large cube plug with cable strain relief

Solenoid supply voltage	
B	24 VDC

Operation	
3	Stepless stroke with proportional control

Pilot connection	
S	'X' through cone 'Y' through mounting surface

PHASE-OUT PRODUCT
Do not use in new applications!

Spare Parts

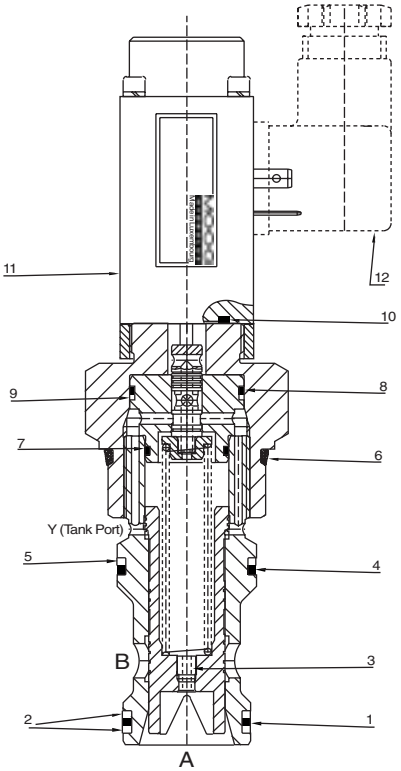

PARTS LIST				
Position #	Quantity	Designation	Part Number	
			DPCMEE16S8	DPCMEE20S8
–	1	Seal Kit	XEB12544-000-00	XEB13696-000-00
1	1	O-ring, Viton 21.95 x 1.78	X980-02020	
	1	O-ring, Viton 28.24 x 2.62		X980-02122
2	2	Back-up Ring	X783-00062	
	2	Back-up Ring		X783-00077
3	1	Orifice M5 x 5 x 1.0	X784-90510	
4	1	O-ring, Viton 23.47 x 2.62	X980-02119	
	1	O-ring, Viton 31.42 x 2.62		X980-02124
5	1	Back-up Ring	X783-00030	
	1	Back-up Ring		X783-00078
6	1	O-ring, Viton 29.82 x 2.62	X980-02123	
	1	O-ring, Viton 37.77 x 2.62		X980-02128
7	1	O-ring, Viton 12.42 x 1.78	X980-02014	
	1	O-ring, Viton 18.77 x 1.78		X980-02018
8	1	O-ring, Viton 20.35 x 1.78	X980-02019	
	1	O-ring, Viton 26.70 x 1.78		X980-02023
9	1	Back-up Ring	X783-00043	
	1	Back-up Ring		X783-00079
10	1	O-ring, Viton 18.77 x 1.78	X980-02018	
	1	O-ring, Viton 18.77 x 1.78		X980-02018
11	1	Prop. Solenoid - 12 V DC	X788-10126	
	1	Prop. Solenoid - 24 V DC	X788-32202	
12*	1	Plug-in Connector w/o LED, DIN 43650 / ISO 4400 (PG9)-Black	X798-00004	
	1	Plug-in Connector w/o LED, DIN 43650 / ISO 4400 (PG9)-Grey	X798-00005	
	1	Big Plug-in Connector w/o LED, DIN 43650 / ISO 4400 (PG11)-Black	XEB16580-000-00	
	1	Big Plug-in Connector w/o LED, DIN 43650 / ISO 4400 (PG11)-Grey	XEB16577-000-00	
	1	Big Plug-in Connector with LED 24VDC and free wheeling, DIN 43650 / ISO 4400 (PG11)-Black	XEB16581-000-00	
	1	Big Plug-in Connector with LED 24VDC and free wheeling, DIN 43650 / ISO 4400 (PG11)-Grey	XEB16578-000-00	

Recommended Amplifiers*

–	1	HAN 209 - 10 - 08 (for use with 24VDC supply voltage coils only) - Eurocard style 100 x 160 mm	X798-02005
		HAN 209 - 10 - 16 (for use with 12VDC supply voltage coils only) - Eurocard style 100 x 160 mm	X798-02006
		SKDHD32S - Card Holder for above.	X798-02013
		STV1010 - Plug-in box IP65 rated (for use with 24 VDC supply voltage coils only) 104 x 45 x 51 mm	X798-02060
		STV1010 - Plug-in box IP65 rated (for use with 12 VDC supply voltage coils only) 104 x 45 x 51 mm	X798-02061
		Snap-on module EM1020 (only for use with 24VDC supply voltage coil models) 79 x 74 x 22.5	X798-02031

*OPTIONAL – Not part of delivery.

TAKE A CLOSER LOOK.

Moog designs a range of motion control products that complement the performance of those featured in this catalog.
Visit our website for more information and contact the Moog facility nearest you.

Argentina
+54 11 4326 5916
info.argentina@moog.com

Australia
+61 3 9561 6044
info.australia@moog.com

Brazil
+55 11 3572 0400
info.brazil@moog.com

Canada
+1 716 652 2000
info.canada@moog.com

China
+86 21 2893 1600
info.china@moog.com

Finland
+358 10 422 1840
info.finland@moog.com

France
+33 1 4560 7000
info.france@moog.com

Germany
+49 7031 622 0
info.germany@moog.com

Hong Kong
+852 2 635 3200
info.hongkong@moog.com

India
+91 80 4057 6666
info.india@moog.com

Ireland
+353 21 451 9000
info.ireland@moog.com

Italy
+39 0332 421 111
info.italy@moog.com

Japan
+81 46 355 3767
info.japan@moog.com

Korea
+82 31 764 6711
info.korea@moog.com

Luxembourg
+352 40 46 401
info.luxembourg@moog.com

The Netherlands
+31 252 462 000
info.thenetherlands@moog.com

Norway
+47 6494 1948
info.norway@moog.com

Russia
+7 8 31 713 1811
info.russia@moog.com

Singapore
+65 677 36238
info.singapore@moog.com

South Africa
+27 12 653 6768
info.southafrica@moog.com

Spain
+34 902 133 240
info.spain@moog.com

Sweden
+46 31 680 060
info.sweden@moog.com

Switzerland
+41 71 394 5010
info.switzerland@moog.com

Turkey
+90 216 663 6020
info.turkey@moog.com

United Kingdom
+44 168 429 6600
info.uk@moog.com

USA
+1 716 652 2000
info.usa@moog.com

www.moog.com/industrial

Moog is a registered trademark of Moog Inc. and its subsidiaries. All trademarks as indicated herein are the property of Moog Inc. and its subsidiaries.

©2015 Moog Inc. All rights reserved. All changes are reserved.

Differential Proportional Flow Valve
07/2016, DPCME-1-EN-Differential Proportional Flow Valve