MOOG®

# Model 79-500
# High Flow Servovalve

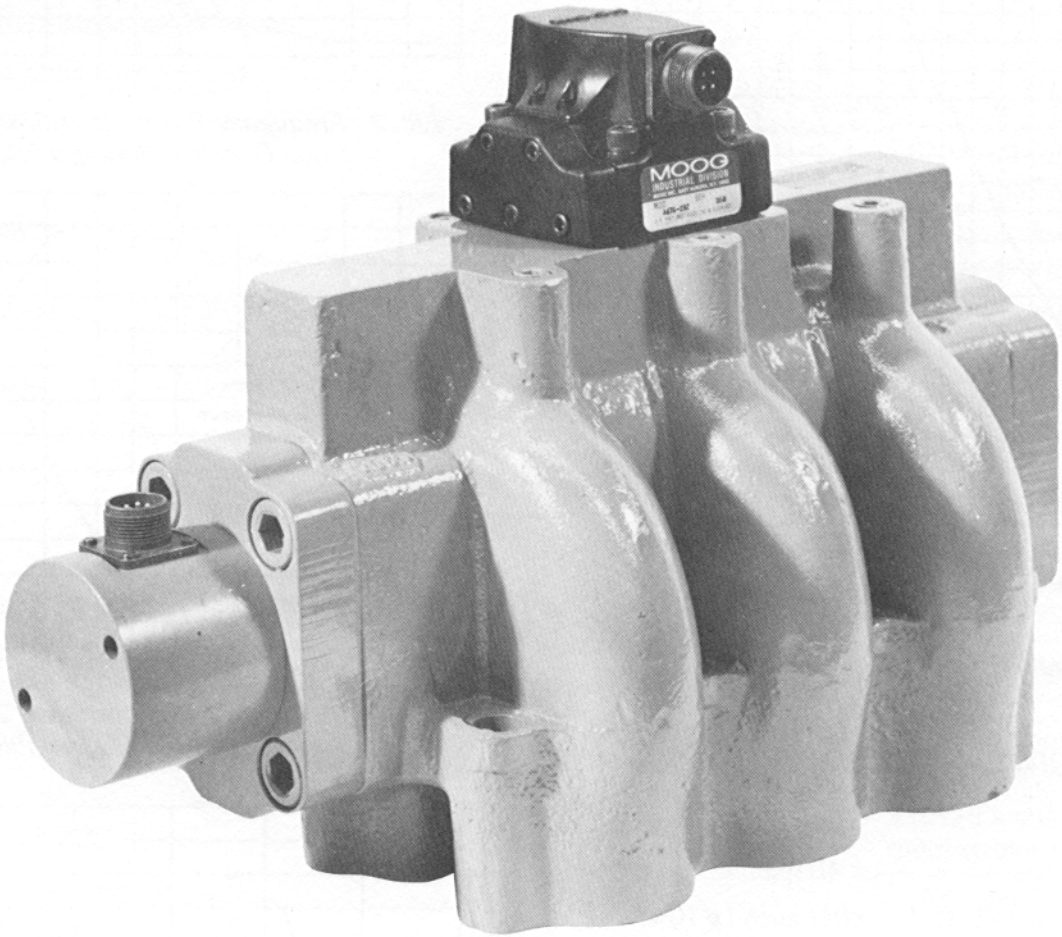


## Features

- symmetrical, four-way, closed-center flow control
- modular pilot valve
- separate pilot supply and return ports
- rugged, cast iron, power valve body
- long life, hardened spool and bushing
- electrical feedback allows convenient change in rated flow to help optimize system performance
- spool position LVDT electrically isolated from hydraulic fluid
- optional DCDT
- small amplitude dynamic response to 80 Hz

These three-stage servovalves provide high dynamic response for precision control of position, velocity, or force in systems requiring from 150 hp to 1000 hp. Maximum rated flow for these servovalves is 750 gpm at 1000 psi drop. Operating supply pressure can be as high as 4000 psi.

Electrical feedback of power valve spool position is provided by an LVDT. A separate exciter, demodulator and servoamplifier are necessary to close the spool position servoloop.

Alternatively, an optional dc to dc transducer can be supplied. This DCDT has a self-contained exciter and demodulator which simplifies the external electronics.

# Performance

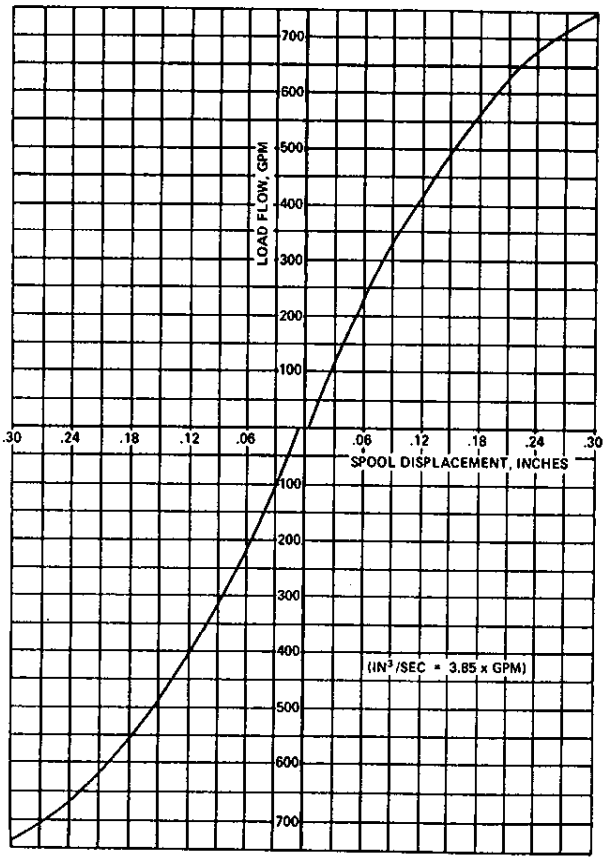


*Fig. 1 Power Valve Flow Gain @ 1000 psi Valve Drop*

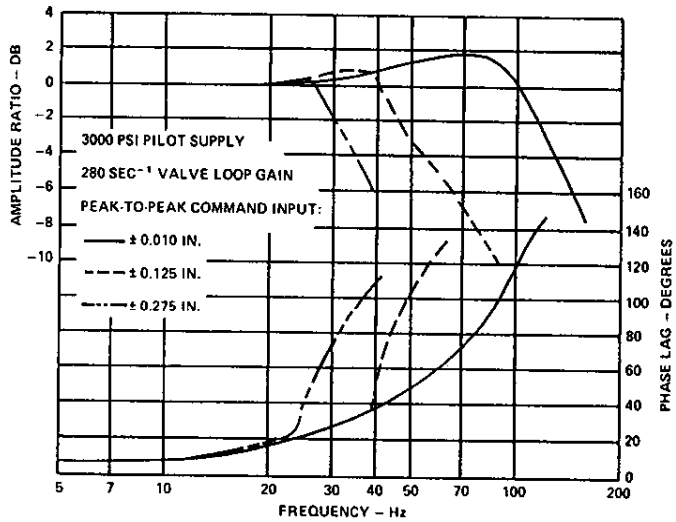


*Fig. 2 Frequency Response with 280 sec$^{-1}$ Loop Gain and 3000 psi Pilot Supply*

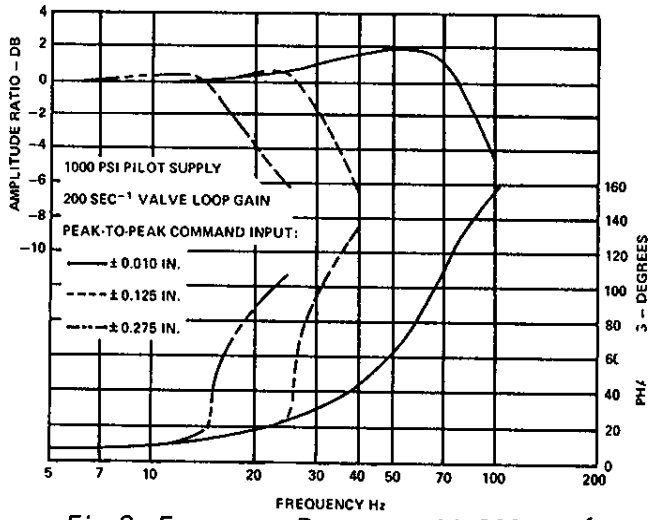


*Fig. 3 Frequency Response with 200 sec$^{-1}$ Loop Gain and 1000 psi Pilot Supply*

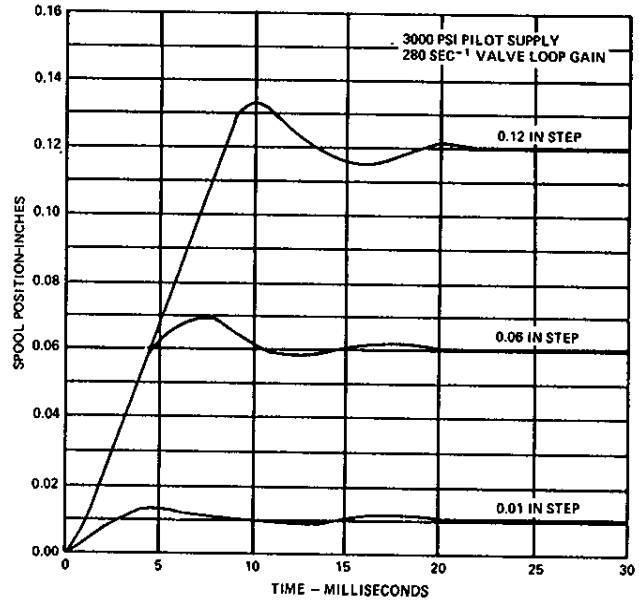


*Fig. 4 Small Amplitude Step Response*

**Pilot Valve Specifications**

Model Number ..... AO76-232

Rated Flow at 1000 psi ... 5.0 gpm

Rated Input
series coils ..... ± 20 ma
parallel coils ..... ± 40 ma

Coil Resistance at +25° C .. 80Ω each (± 10%)

Approximate Coil Inductance
series coils ..... 0.66 Henrys
parallel coils ..... 0.18 Henrys

**Power Valve Specifications**

Spool end area ..... 1.57 in$^2$

Spool flow gain at 1000 psi
(in low flow region) .... $1.6 \times 10^4 \ \frac{\text{in}^3/\text{sec}}{\text{inch}}$

Spool stroke
for 425 gpm rated flow .. ± 0.125 in.
for 720 gpm rated flow .. ± 0.275 in.

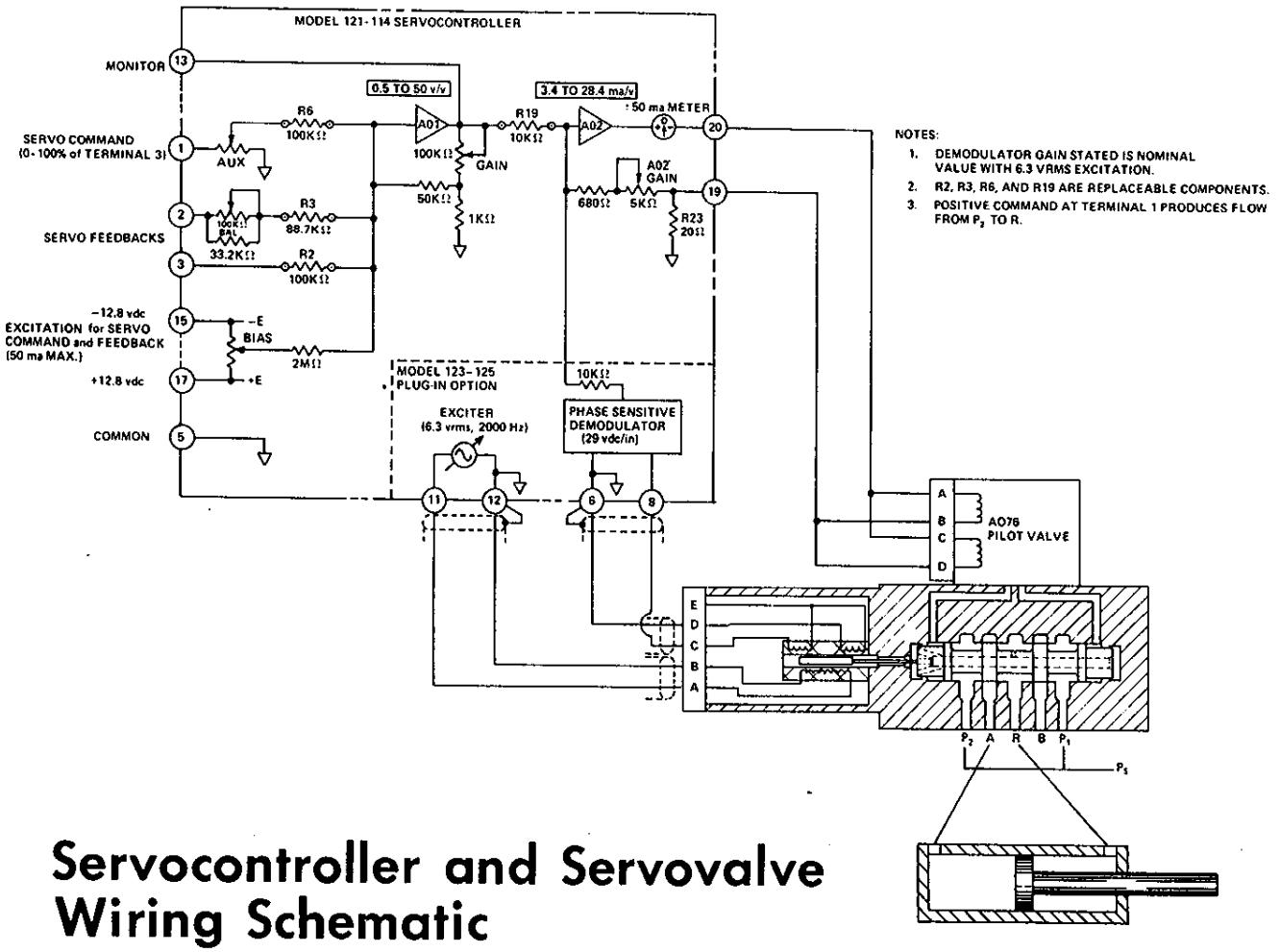


# Servocontroller and Servovalve Wiring Schematic

## SPOOL POSITION TRANSDUCER SPECIFICATIONS

| | |
|---|---|
| Type | LVDT* |
| Excitation Frequency | |
| minimum | 400 Hz |
| maximum | 5000 Hz |
| recommended | 2000 to 4000 Hz |
| Maximum Excitation Voltage | 15 vrms |
| Approximate Excitation Power (at 2000 Hz) | $6.5 \times 10^{-4}$ va/volt |
| Recommended Load Impedance | $\geq 50\ K\Omega$ |
| Output Sensitivity and Phase Shift | See Figure 5 |

*LVDT = linear variable differential transformer
DCDT (direct current differential transformer) available on special order

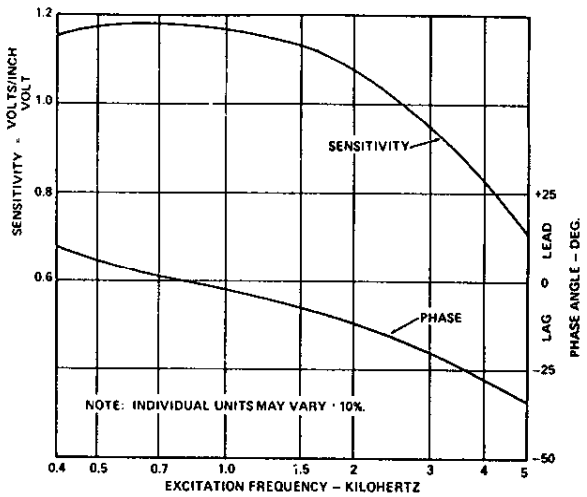


*Fig. 5 Nominal LVDT Output Characteristics*

# Set-up and Operation

## SERVOAMPLIFIER

The Model 121-114 is a convenient servoamplifier for use with the 79-500 servovalve. An optional plug-in circuit card, the Model 123-125, contains an exciter and demodulator for operation of the spool position LVDT.

The ac excitation is nominally 6.3 vrms (adjustable) and the carrier frequency is 2000 Hz. The 2000 Hz frequency is recommended to achieve best servovalve response; however, a lower frequency may be necessary if a long cable run is required.

With the nominal excitation of 6.3 vrms at 2000 Hz, the spool position LVDT will have a sensitivity (from Figure 5) of 1.07 x 6.3 = 6.74 vrms/inch. The demodulator gain of the Model 123-125 circuit card is 4.3 vdc/vrms.

## SERVOVALVE LOOP GAIN

The inner loop gain of the 79-500 servovalve when operating with 3000 psi pilot supply pressure and with the coils of the pilot valve in parallel is determined by:

$$K_{IL} = \frac{K_A K_{PV} K_D K_X}{A_S}$$

where

$K_{IL}$ = servovalve inner loop gain $sec^{-1}$

$K_A$ = servoamplifier gain ma/vdc

$K_{PV}$ = pilot valve gain

$$= \frac{5.0 \text{ gpm} \times 3.85 \frac{in^3/sec}{gpm} \sqrt{\frac{3000 \text{ psi}}{1000 \text{ psi}}}}{40 \text{ ma}}$$

$$= 0.83 \frac{in^3/sec}{ma}$$

$K_D$ = demodulator gain = 4.3 vdc/vrms

$K_X$ = LVDT gain = 6.74 vrms/inch

$A_S$ = power spool end area = 1.57 $in^2$

For the recommended maximum inner loop gain of 280 $sec^{-1}$:

$$K_A = \frac{280 \times 1.57}{0.83 \times 4.3 \times 6.74} = 18.3 \text{ ma/vdc}$$

## LOOP GAIN SET-UP

- Connect amplifier terminals 19 and 20 to the pilot valve electrical connector per the schematic on Page 3.
- Monitor terminal 13 (output of A01) and adjust the BIAS pot on the front panel to obtain first +1.0 vdc, then −1.0 vdc.
- Monitor the valve current by reading the front panel meter (±50 ma full scale) or by measuring the voltage drop across the 20Ω sensing resistor R23 (terminal 19 to terminal 5). The latter is the more accurate method.
- Adjust the A02 GAIN pot located on the back of the servocontroller board to obtain the desired amplifier gain with the −1.0v bias input. Note that the 18.3 ma/vdc is a calculated maximum value. It is recommended that the amplifier gain be turned down the first time supply pressure is applied. It may not be possible to operate with satisfactory valve stability at the maximum loop gain as both the pilot valve and LVDT have about ±10% gain tolerances.

## OUTER SERVOLOOP GAIN

The gain of the 79–500 servovalve in the outer loop will be:

$$K_{VAL} = \frac{K_S}{K_D K_X}$$

where

$K_{VAL}$ = overall valve gain $\frac{in^3/sec}{vdc}$

$K_S$ = power valve flow gain (see Specifications, Page 2)

$K_D$ = demodulator gain vdc/vrms

$K_X$ = LVDT gain vrms/inch

$$K_{VAL} = \frac{1.6 \times 10^4}{4.3 \times 6.74} = 550. \frac{in^3/sec}{vdc}$$

Note that the power valve flow gain is specified for operation at 1000 psi supply. This gain must be corrected for operation at other supply pressures by multiplying the square root of the ratio of supply pressures.

The input amplifier, A01, of the Model 121-114 can be used for summing servo command and feedback signals. The A01 GAIN control (accessible on the front panel) provides a convenient outer loop gain adjustment.

# Specifications

| | |
|---|---|
| Maximum rated flow at 1000 psi valve drop | 750 gpm |
| Internal leakage at 1000 psi supply | < 17.0 gpm |
| Recommended supply pressures | |
| pilot valve | 1000 psi minimum<br>3000 psi max. standard<br>4000 psi special order |
| third-stage power valve | 4000 psi max. |
| Operating temperature | −10° C to +80° C |
| Fluids | petroleum base<br>60 to 450 SUS @ 100° F<br>(10 to 97 cSt @ 38° C) |
| Seals | Buna-N seals standard<br>Viton seals available on special order |
| Recommended supply filtration | 10μm nominal, 25μm absolute or better |
| Weight | 120 pounds |

# Performance Summary

(with 3000 psi Pilot Pressure and Valve Loop Gain of 280 $sec^{-1}$)

| | servoloop scaled for full power valve output at: ± 0.125 inch spool stroke | ± 0.275 inch spool stroke |
|---|---|---|
| Flow at 1000 psi supply | 425 gpm | 720 gpm |
| Linearity | See Figure 1 | |
| Flow symmetry | < ±5% | |
| Spool Overlap | ±0.003 inch | |
| Typical blocked load pressure gain at null | 10% to 30% $P_s$/.001 inch spool travel | |
| Hysteresis | < 0.6% | |
| Threshold | < 0.3% | |
| Null Shift | | |
| with 500 psi change in pilot supply pressure | < ±1.5% | < ±0.7% |
| with 500 psi change in pilot return pressure | < ±1.5% | < ±0.7% |
| with 50° change in fluid temperature | < ±1.5% | < ±0.7% |
| Dynamic response at ± 100% input amplitude | | |
| < ±2 db amplitude ratio | to 48 Hz | to 28 Hz |
| approximate frequency for 90° phase lag | 46 Hz | 34 Hz |

# Installation Details

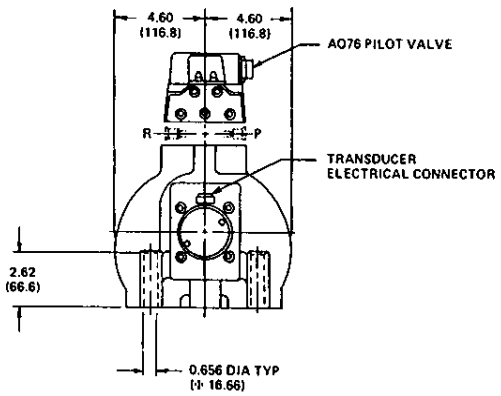


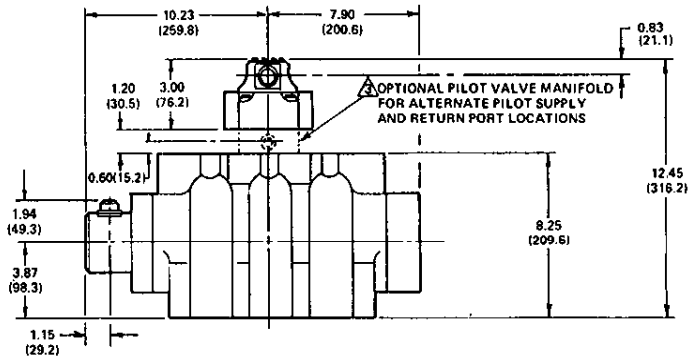


NOTES:

1. Dimensions in brackets are in millimeters.
2. Power Valve Ports are 2125 O.D. x 1.75 I.D. x 0.101 deep (Φ 53.98 x Φ 44.5 x 2.57) for MS 28775-225 O-rings, and 0.750 O.D. x 0.44 I.D. x 0.074 deep (Φ 19.05 x 11.2 x 1.88) for MS 28775-113 O-rings
3. Manifold Ports are SAE 8 (0.75 16 UNF straight thread) for 0.50 O.D. tubing.
4. Valve Phasing – flow from $P_2$ to Port A results with:
   series coils: B & C connected; A plus, D minus
   parallel coils: A & C plus, B & D minus
5. LVDT Phasing – with flow out Port A; A & C common, B & D are in phase.

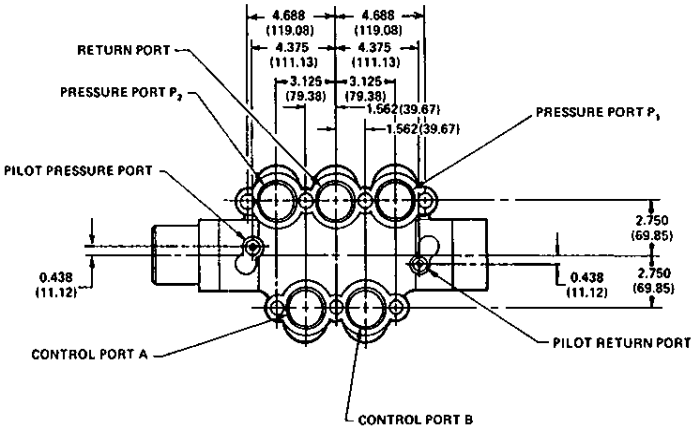


STANDARD MODELS:

MODEL 79[ ]50[ ]

| | |
|---|---|
| 0 | = 425 gpm rated flow @ 1000 psi valve drop (±0.125 in. power valve stroke) |
| 1 | = 720 gpm rated flow @ 1000 psi valve drop (±0.275 in. power valve stroke) |
| – | = Pilot Valve Manifold not supplied |
| A | = Pilot Valve Manifold with pilot supply port only |
| B | = Pilot Valve Manifold with pilot supply and return ports |

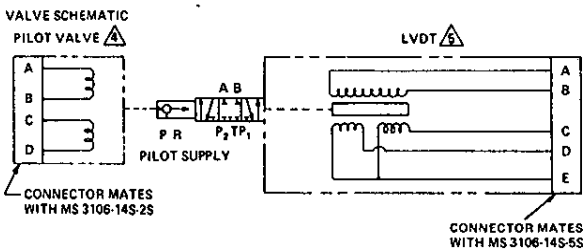


# Accessories

| | Part Number |
|---|---|
| Mounting Manifold (to 400 gpm) | A31954-1 |
| 4 SAE-32 (2½-12 UN Straight Thread) for 2" Tubing | |
| 2 SAE-8 (¾-16 UNF Straight Thread) for 1/2" Tubing | |
| Mounting Manifold ( > 400 gpm) | A31973-1 |
| 5 Weld Flanges; 2 3/8-18 NPT) | |
| Flange, Weld Neck (5 required) | A31974-1 |
| Flushing Block | A37150-1 |
| Mounts in place of servovalve for flushing system | |
| Replacement O-Rings (Buna-N 70 Durometer) | |
| power valve base (4 required) | 080-58532-92 |
| power valve base (2 required) | 080-58532-16 |
| pilot valve base (4 required) | 080-58532-22 |
| pilot manifold (3 required) | 080-58532-22 |
| pilot manifold (1 required) | 080-58532-8 |
| Mating Electrical Connectors | |
| pilot valve (MS 3106F14S-2S) | 061-49054F14S-2S |
| LVDT (MS 3106F14S-5S) | 061-49054F14S-5S |