Electrical feedback servovalve E769 Series

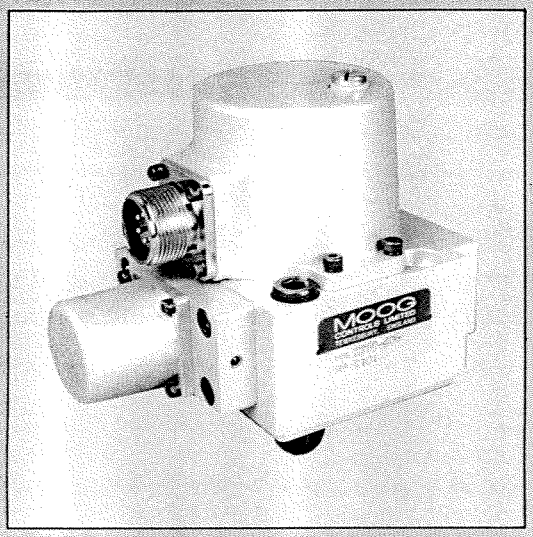

Features

Electrical Feedback

2-stage design

High resolution

Low hysteresis

Low null shift

Integral electronics

Description

The design of the Moog E769 Series is based on the design of the well proven E760 Series.

The E769 Series replaces conventional mechanical feedback with electrical feedback using a spool position transducer. This provides increased performance and stability.

The design also incorporates integral electronics to close the spool position loop. This provides high loop gain and hence improved linearity over the E760 Series.

Specification

Supply pressure, 15-210 Bar (315 Bar available on request)

Return line pressure, 100% rated supply pressure up to 210 Bar

Resolution, <0.1% (at 210 Bar)

Hysteresis, <0.5% (at 210 Bar)

Null bias, <1%

Null shifts –
with 55°C temperature change: <1%
with change in supply pressure from 80% to 110%: <1%

Temperature range, −20°C to +80°C

Fluids, petroleum based hydraulic fluids 10 to 100 cSt at 38°C

Seal material, Buna N (Viton A and EPR available on request)

Filtration, 15μm absolute or better (β15>75)

Maximum flow rates (at 70 Bar) pressure drop –
Standard, 5-75 l/min
High response, 3.8-38 l/min
Super high response, 3.8-19 l/min
For flow rates outside this range please refer to Moog

Electrical power requirements,
±15V ±3% (supply voltage)
±200mA max. (current consumption)

Performance

Typical frequency response at 210 Bar, 38°C and 40% signal.

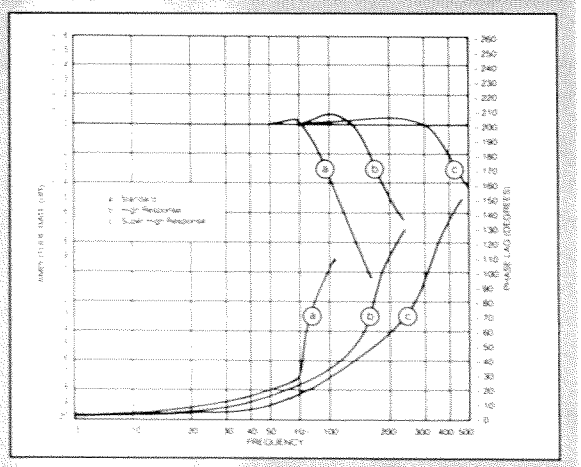

For improved performance characteristics please consult Moog

obsolete

Installation

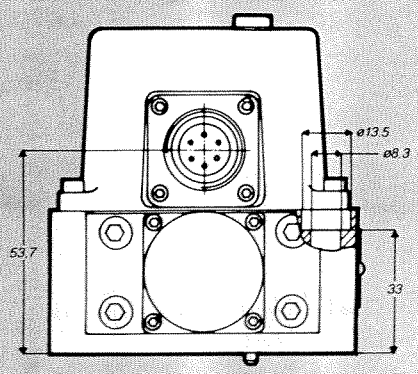

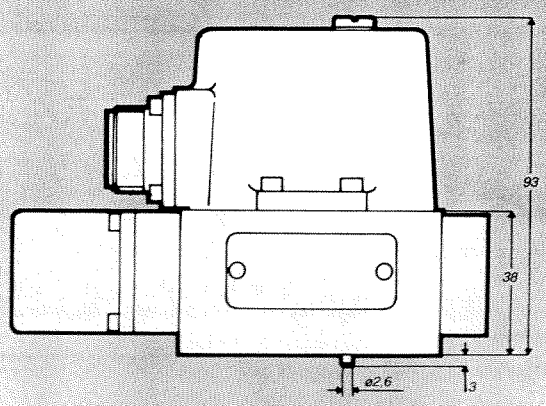

Electrical Connections

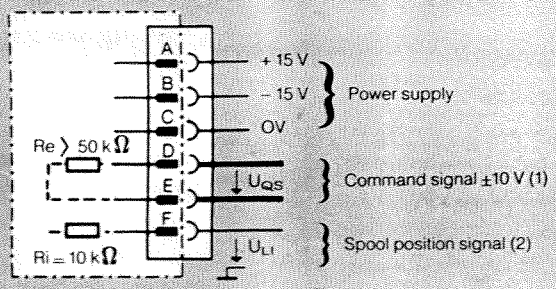

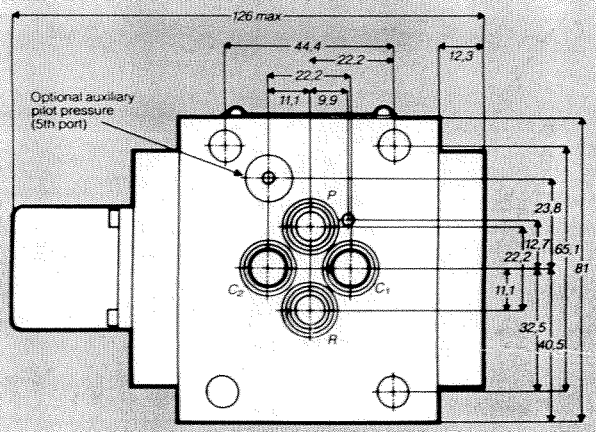

All dimensions in mm

Notes

1. U_{QS} – analogue voltage signal – positive signal (D relative to E) will cause flow from P to C_1 and C_2 to R.
2. U_{L1} – ±100% spool stroke ±10V

Suggesting mounting screws, M8 X 45 capscrews, torqued to 25Nm.

Ports, P, R, C_1, and C_2 Ø 9,5mm, O-rings, 1,78mm section X 10,82 I.D.

Pilot port, Ø 3mm, O-ring 1,78mm section X 9,25 I.D.

Mounting surface for valve requires a finish of Ra 1 μm or better, flat to within 0,02mm.

Electrical connector mates with MS3106-14S-6S (Moog part number 49054F-14S-6S) or equivalent.

Valve weight, 1.1 Kg

Compressed oil volume for one control port, 4,0 ml

We reserve the right to alter specification without prior notice.
For full installation details please consult Moog

Moog Controls Limited, Ashchurch, Tewkesbury,
Glos GL20 8NA Telephone (0684) 296600
Telex 43229. Telefax (0684) 296760