D-1125-F-10-T SPECIFICATIONS

MOTOR CHARACTERISTICS @ 25° C

Specification	Units	Value
Peak Torque, T_P	oz-in	6.6
Motor Constant, K_M	oz-in / √W	0.865
Number of Poles		4
Weight	oz (nom)	1.8
Motor Inertia, J_M	oz-in-s^2	1.50E-04
Friction Torque, T_F	oz-in	0.20
Electrical Time Constant, T_E	ms	0.246
Mechanical Time Constant, T_M	ms	28.41
Temperature Rise, TPR'	°C / W	34
Ripple Torque, T_R	max. avg. to peak (%)	7

MOTOR WINDING CONSTANTS

Specification	Units	Value
Torque Sensitivity, K_T	oz-in / amp	3.12
Back EMF, K_E	V per rad/s	0.022
Terminal Resistance, R_M	ohms (nom)	13
Terminal Inductance, L_M	mH (nom)	3.2
Voltage, Stalled at Peak Torque, V_P	volts	27.6
Amps at Peak Torque, I_P	amps	2.12
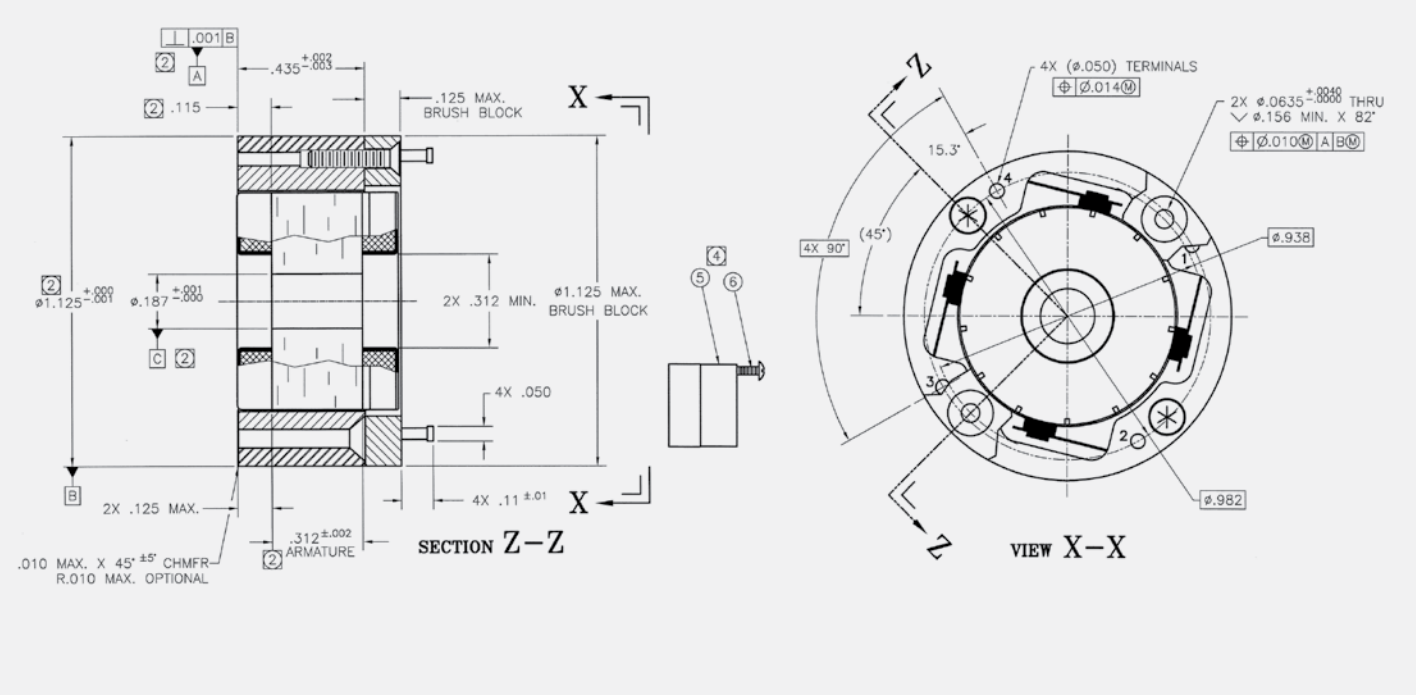
MECHANICAL DIMENSIONS (INCHES)