D-2813-G-1HT SPECIFICATIONS

MOTOR CHARACTERISTICS @ 25° C

Specification	Units	Value
Peak Torque, T_P	oz-in	95
Motor Constant, K_M	oz-in / √W	15.3
Number of Poles		8
Weight	oz (nom)	21
Motor Inertia, J_M	oz-in-s^2	1.40E-03
Friction Torque, T_F	oz-in	2.5
Electrical Time Constant, T_E	ms	0.575
Mechanical Time Constant, T_M	ms	8.82
Temperature Rise, TPR'	°C / W	7
Ripple Torque, T_R	max. avg. to peak (%)	5

MOTOR WINDING CONSTANTS

Specification	Units	Value
Torque Sensitivity, K_T	oz-in / amp	43.3
Back EMF, K_E	V per rad/s	0.306
Terminal Resistance, R_M	ohms (nom)	8
Terminal Inductance, L_M	mH (nom)	4.6
Voltage, Stalled at Peak Torque, V_P	volts	17.6
Amps at Peak Torque, I_P	amps	2.2
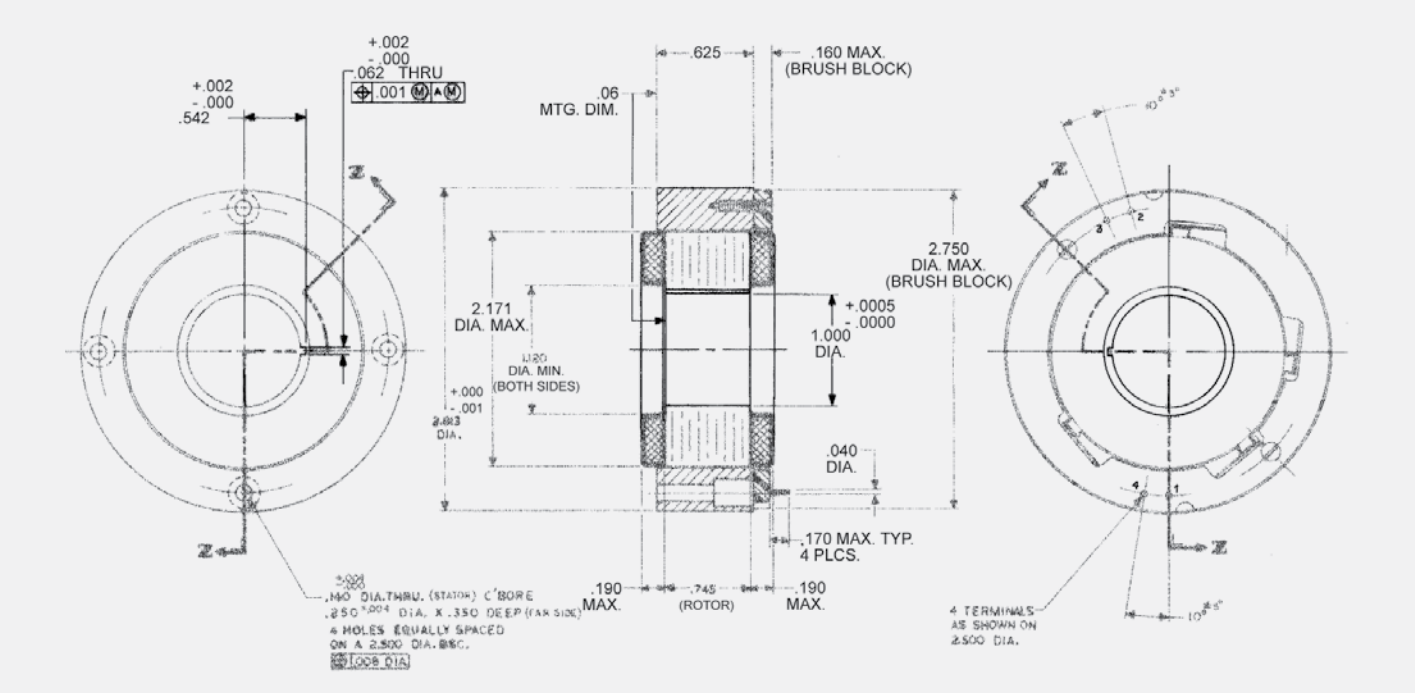
MECHANICAL DIMENSIONS (INCHES)