DB-12600-A-1ES SPECIFICATIONS

MOTOR CHARACTERISTICS @ 25° C

Specification	Units	Value
Peak Torque, T_P	oz-in	21248
Motor Constant, K_M	oz-in / √W	973
Number of Poles		32
Number of Phases		3"Y"
Weight	oz (nom)	528
Motor Inertia, J_M	oz-in-s^2	7.14
Friction Torque, T_F	oz-in	16
Electrical Time Constant, T_E	ms	6
Mechanical Time Constant, T_M	ms	1.07
*Temperature Rise, TPR'	°C / W	0.43
Integral Feedback Device		No

MOTOR WINDING CONSTANTS

Specification	Units	Value
**Torque Sensitivity, K_T	oz-in/amp ± 10%	2656
Back EMF, K_E	V per rad/s ± 10%	18.8
Terminal Resistance, R_M	ohms ± 10%	7.45
Terminal Inductance, L_M	mH ± 30%	45
Voltage, Stalled at Peak Torque, V_P	volts	60
Amps at Peak Torque, I_P	amps	8.0
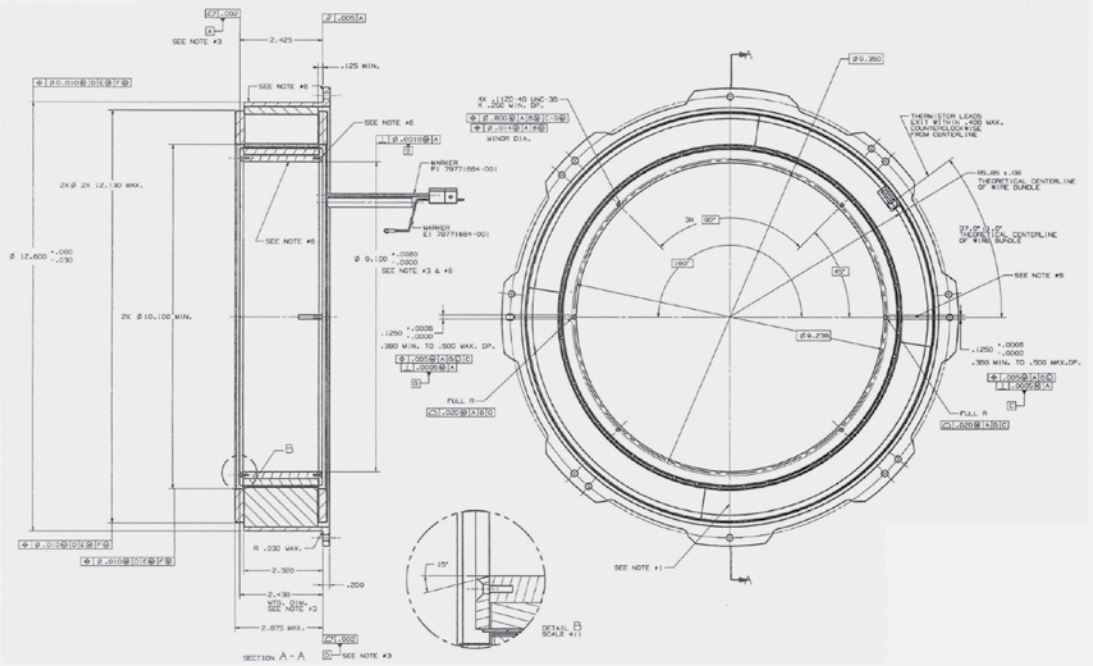
MECHANICAL DIMENSIONS (INCHES)