TD-1500-H-1SC SPECIFICATIONS

MOTOR CHARACTERISTICS @ 25° C

Specification	Units	Value
Peak Torque, T_P	oz-in	22
Motor Constant, K_M	oz-in / √W	2.4
Excursion Angle	degrees	± 35
Number of Poles		4
Weight	oz (nom)	2.5
Motor Inertia, J_M	oz-in-s^2	1.55E-04
Friction Torque, T_F	oz-in	0.35
Electrical Time Constant, T_E	ms	0.348
Mechanical Time Constant, T_M	ms	3.81

MOTOR WINDING CONSTANTS

Specification	Units	Value
Torque Sensitivity, K_T	oz-in/amp	5.75
Back EMF, K_E	V per rad/s	0.0406
Terminal Resistance, R_M	ohms (nom)	5.75
Terminal Inductance, L_M	mH (nom)	2
Voltage, Stalled at Peak Torque, V_P	volts	27
Amps at Peak Torque, I_P	amps	4.25
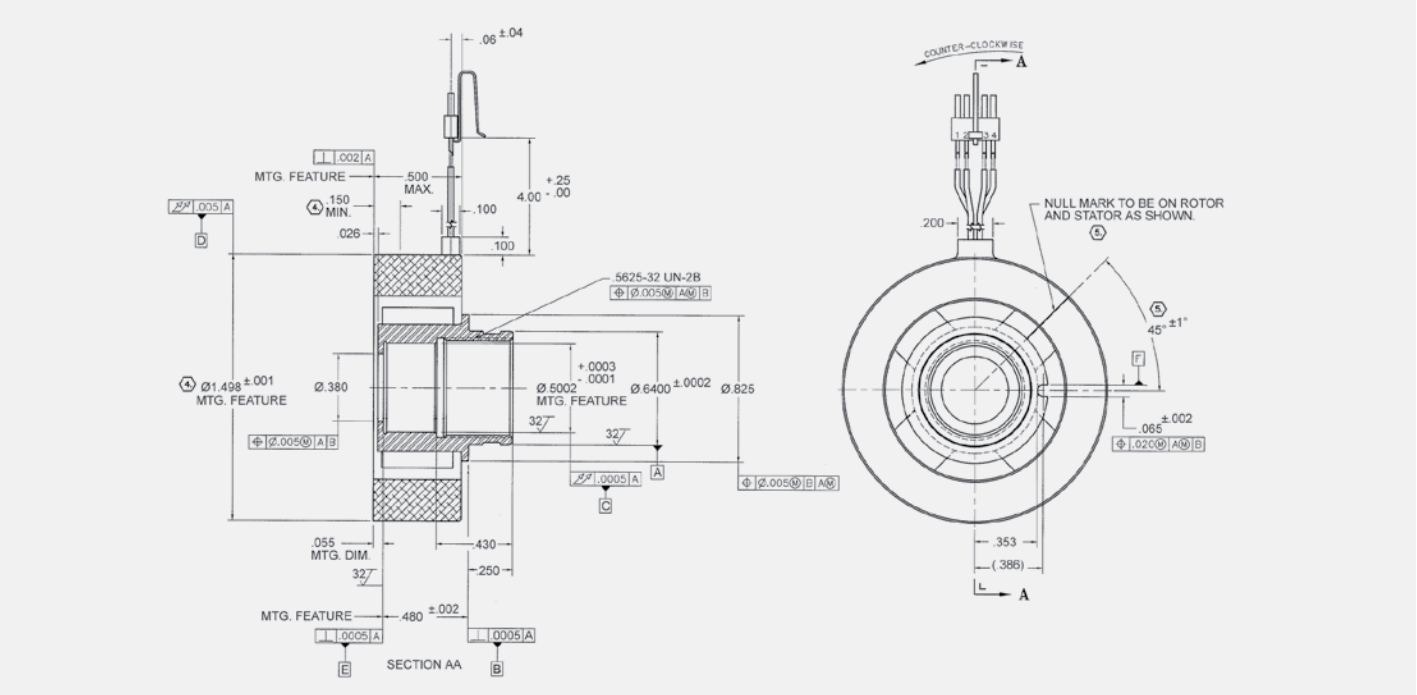
MECHANICAL DIMENSIONS (INCHES)