TD-3182-A-2S SPECIFICATIONS

MOTOR CHARACTERISTICS @ 25° C

Specification	Units	Value
Peak Torque, T_P	oz-in	20
Motor Constant, K_M	oz-in / √W	3.17
Excursion Angle	degrees	± 6
Number of Poles		4
Weight	oz (nom)	8.5
Motor Inertia, J_M	oz-in-s^2	6.00E-03
Friction Torque, T_F	oz-in	0.2
Electrical Time Constant, T_E	ms	0.656
Mechanical Time Constant, T_M	ms	84.46

MOTOR WINDING CONSTANTS

Specification	Units	Value
**Torque Sensitivity, K_T	oz-in/amp	22
Back EMF, K_E	V per rad/s	0.155
Terminal Resistance, R_M	ohms (nom)	48
Terminal Inductance, L_M	mH (nom)	31.5
Voltage, Stalled at Peak Torque, V_P	volts	95
Amps at Peak Torque, I_P	amps	1.0
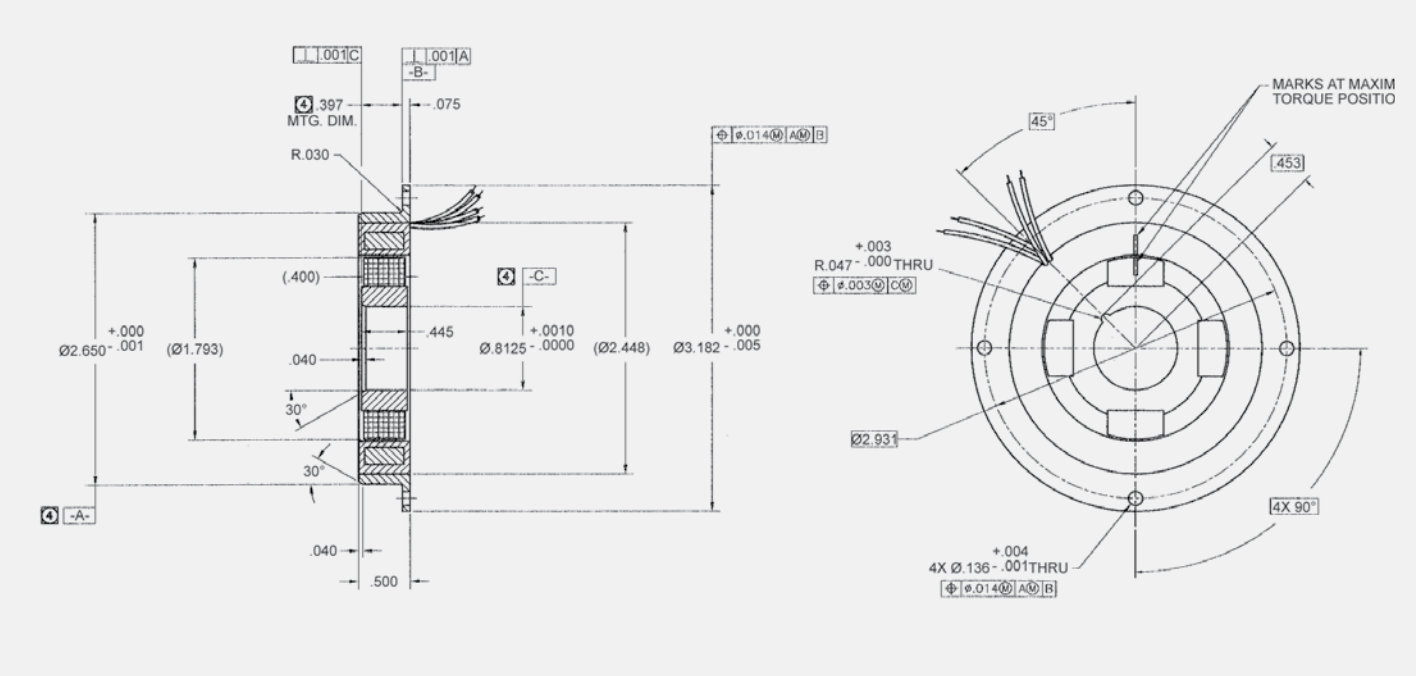
MECHANICAL DIMENSIONS (INCHES)